ReliaMAX Pumps (Electric)

Reliable Performance & Maximum Value

Lubrication Technologies, Inc.

SEPARATING SURFACES SINCE '76

Why Lube It While You Use It?

LUBRICATION SYSTEMS ILC

Exclusive North American Distributor
Series Progressive Lubrication Systems Experts

LESS DOWNTIME

Save Time and Money
Improve Equipment Reliability
Slash Maintenance Costs

120 Bosworth Street, West Springfield MA 01089
413-788-LUBE (5823)
www.LubeTechnologies.com

Contents:

WARNING

FLUID INJECTION HAZARD

Fluid leaks from incorrectly installed or ruptured components, and/or failure to verify the components are properly installed and tested, can result in serious injury such as fluid spraying in the eyes or on skin and fluid injection, or equipment damage. Installation must be done by a qualified professional or Komatsu certified technician.

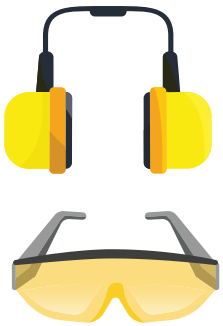

WARNING

Before installing any equipment:

- Familiarize yourself with all warnings and guidelines specific to the machinery.
- Review all warnings provided in the instruction manuals provided with the equipment.
- Be sure all power to the machine is off including, when applicable, disconnecting the main power breaker.
- Follow all grounding procedures.
- All safety and protective equipment must be worn.
- Installation must be completed by trained and qualified personnel.

Why Use an Automatic Lubrication System:

*Relia***MAX**'s automated lubrication system ensures that all connected lubrication points on a vehicle or other equipment are lubricated with a predetermined amount of grease at the correct interval. As lubrication takes place while the vehicle is in use, the lubricant is dispensed to all the connected lubrication points during movement of the components, ensuring an improved distribution of the lubricant over the surface area.

Apart from refilling the grease reservoir and performing a periodic quick system inspection, the *Relia***MAX** automated lubrication system does not require anything else to get the job done.

*Relia***MAX**'s automated lubrication systems are designed with the utmost care and tested rigorously. This en-sures an extended operational life and problem free operation, even under the most extreme operating conditions.

The high *Relia***MAX** installation standards along with the use of the correct type of grease and periodic checks ensures trouble free operation of the system. The periodic checks, which take little time and effort, can be performed during the normal maintenance of the equipment.

Exclusive North American Distributor
Series Progressive Lubrication Systems Experts

Daily, precise, manual lubrication is difficult to achieve, safely...

Precise Automatic Lubrication

- *Dramatically reduced lubricant consumption and waste*
- *Dynamic lubrication insures lubricant encompasses all load bearing surface areas*
- *Eliminates contamination as there is no pathway to introduce contaminants*
- *Ultimate life of components is realized especially when high performance Lubrication Engineers greases are utilized*
- *Each lubrication point receives specific and appropriate quantities of lubricant*
- *Frees up operator to be more productive*
- *Asset produces revenue that would be lost*

BENEFITS OF A PROGRESSIVE LUBRICATION SYSTEM

- Extension of maintenance intervals
- Reduces wear on components
- Lower and Less repair and replacement costs
- Prevents downtime.
- More effective use of lubricant.
- Less time spent by technicians servicing equipment.
- Reduces strain on equipment.
- Promotes the use of a single type of lubricant. Preventing compatibility problems and the accidental application of the incorrect type of grease.

ELECTRIC PUMPS
GREASE (ILC-MAX-G)
OR OIL (ILC-MAX-O)

APPLICATIONS

Ideally suitable for the automatic grease lubrication of all types of industrial machines and as a chassis lubrication pump for trucks, trailers, buses, construction and mechanical handling vehicles.
In conjunction with ILC 's DPA, DPM or DPX progressive dividers, more than three hundred greasing points can be automatically centralized from just a single grease pump.

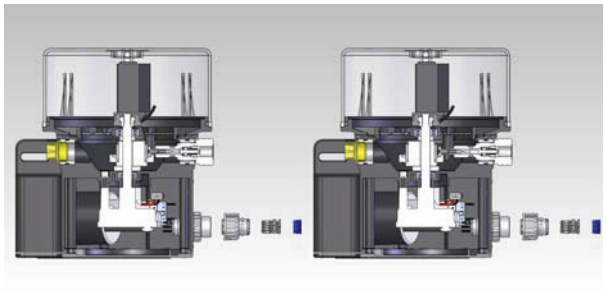

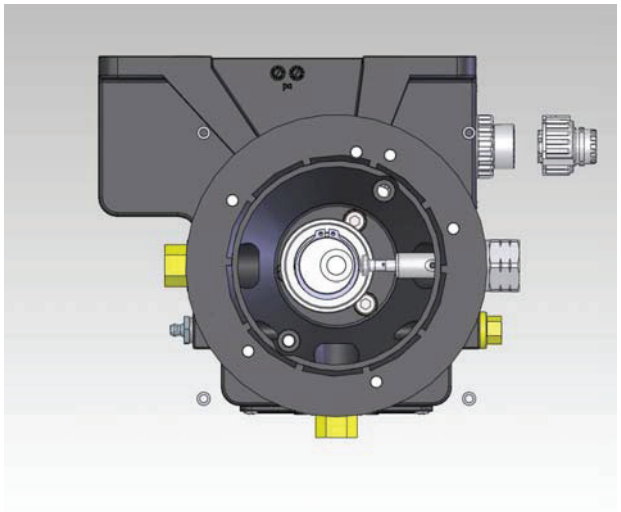

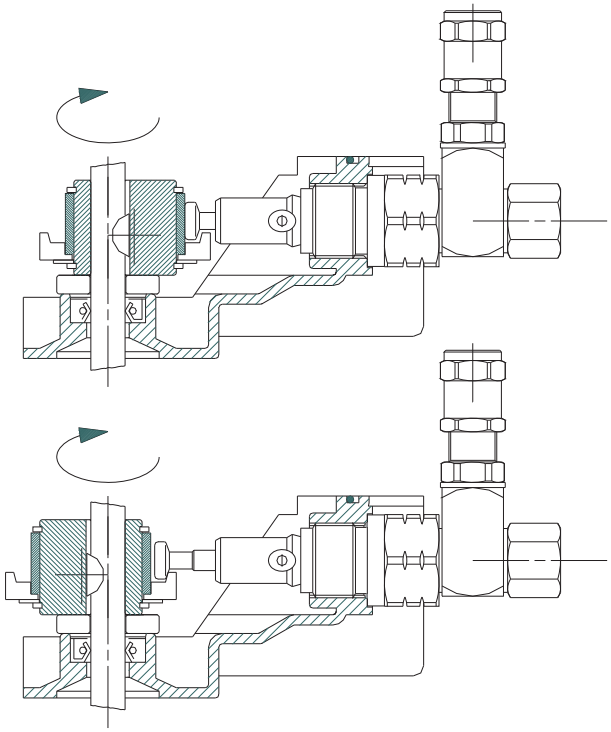

OPERATION

The pumps are designed for intermittent or continuous operation to provide regular pre-programmed lubrication cycles as required for the various applications.
A direct-mounted electric geared motor drives an internal rotating cam, which can actuate up to three externally mounted pump elements.

Every pumping element has a relief valve to protect the system against over-pressure.

For applications where higher volume discharge is required, the output of 2 or 3 pumping elements may be piped together with a single outlet.

120 Bosworth Street, West Springfield MA 01089
413-788-LUBE (5823)
www.lubetechnologies.com

ELECTRIC PUMPS
GREASE (ILC-MAX-G)
OR OIL (ILC-MAX-O)

The transparent reservoir has 2 KG, 4 KG or 8 KG capacity and metallic reservoir has 5 KG.
The pumps cat attains a maximum recommended operating pressure of 250 bar per outlet and will delivery up to 2.88 cc/minute per outlet.
The internal drive shaft is coupled to a specially formed stirring paddle in the reservoir of the pump unit which ensures continuous priming of the pump element inlets, even with grease up to NLGI No. 2 consistency at ambient temperature down to -20 °C

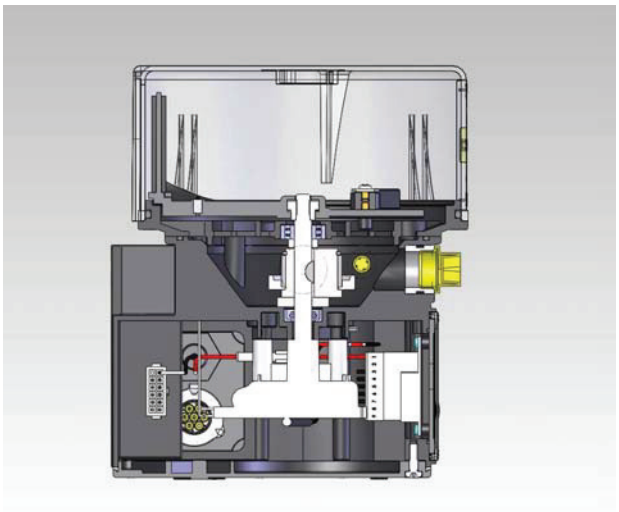

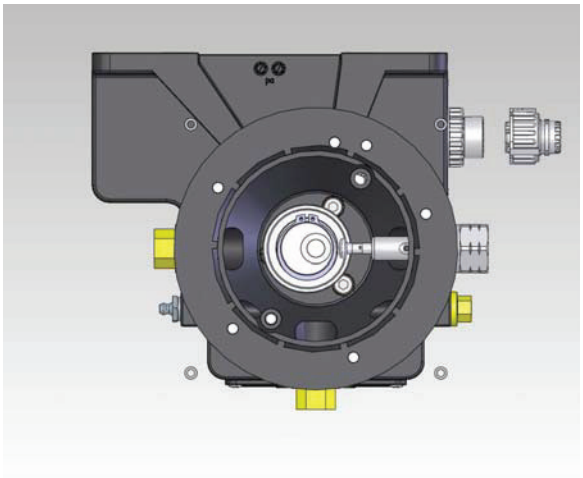

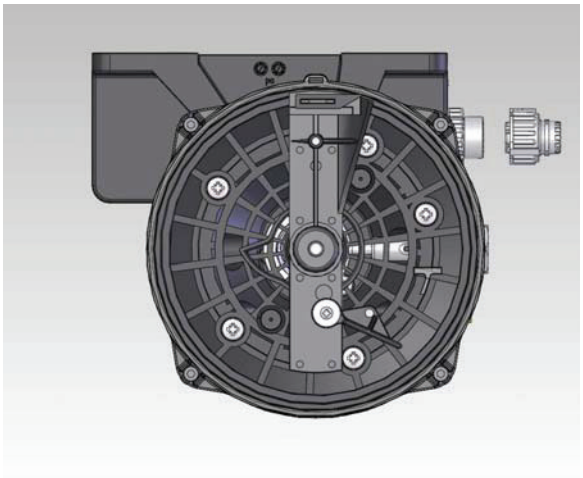

The gear motor is protected by mean of an IP-56 protection degree covering (NYLON PA6 +30% FIBERGLASS). The seal is guarantee from well-mounted "o"-ring.
The pumps can have an integrated electronic control timer built into the covering. The timer can be pre programmed to automatically operate the pump with variable "working time" and "pause times".

Introduction

This guide was developed as a reference tool to provide basic information on the *Relia***MAX** Automatic Lubrication System. It is intended to familiarize the user (you), with the pump/lubrication system and to enable you to use its' various features. The operating instructions contain important information for safe, correct and economic operation of the lubrication system.

Common features and characteristics shared by most popular models of applications usually allow for consistent lube system design. The basic system design in this reference can be individually customized for a majority of the popular models of construction sized excavators operating today.

The purpose of this reference guide is to provide enough basic information to simplify and expedite the process of operating the *Relia***MAX** automated lubrication system.

Your observance will help to avoid hazards, reduce repair costs and downtime, increase the reliability and extend the service life of the system.

This guide must be read and used by all persons who are charged with working with the pump/lubrication system. This includes equipment care takers and maintenance personnel.

By following the steps suggested in this guide, the operator can perform basic maintanence resulting in exceptional system performance that will extend the component life of all pins and bushings connected to the automated lubrication system.

Lubrication points are generally bushings on heavy equipment applications with the exception of rolling element bearings typically used on the rotator of an excavator and the upper and lower bearings that connect the front and rear sections of a wheel loader at the articulation point. Haul trucks and other pieces of equipment will also have these rolling element bearings at main articulation joints and they should always be noted as such as the OEM lubrication recommendations for them require much less lubricant (for example-grease every 1,000 hours) than the recommendations for the front points on a wheel loader which are generally recommended to be greased every 8 hours.

If possible always refer to the OEM manual as you may find that many lubrication points require specific relube intervals. We can accommodate for the variety of intervals to a certain degree in the design of the system. More information is better.

Additional information or questions not addressed in this guide can be directed to your *Relia***MAX** Distributor.

Extremely Important

It is your responsibility to read and understand the operation of your lubrication system. If you read nothing else ***READ THIS PAGE!***

The installation of an automatic lubrication system on a machine does not relieve the user, operator or owner of certain fundamental responsibilities. Common sense must be applied to insure proper operation and protection of the machine's lubricated components.

Please make note of the following

Pump Paddle Rotation

The pump reservoir contains a paddle that rotates and scrapes along the inner wall of the reservoir. Failure to observe periodic rotation of this paddle indicates the pump is not working. Press the (M) manual over ride button located on the front side of the pump under the protective plastic screen (or in the operator's cab if so, equipped with in-cab controls) to observe paddle rotation. If no rotation is observed check the fuse.

Reservoir Level

A properly operating system will consume lubricant and the lube level in the reservoir will decrease. Failure to see a change in the lubricant level indicates a non-functioning system. Check for proper operation.

Lubrication Points

The lubrication system will meter small quantities of lubricant to each and every lubrication point served by the system. If fresh lubricant is not observed at the lubrication points, this indicates a non-functioning system. Check for proper operation.

SUMMARY

1) The pump must rotate.
2.) The reservoir lube level will go down.
3.) The light will flash.
4.) Lubricant will appear at the lubrication points.

IT IS YOUR RESPONSIBILITY TO OBSERVE THESE BASIC INDICATORS OF A NORMALLY FUNCTIONING SYSTEM

ELECTRIC GREASE PUMP ILC-MAX-G 2 (12/24 V DC – 24 V AC)

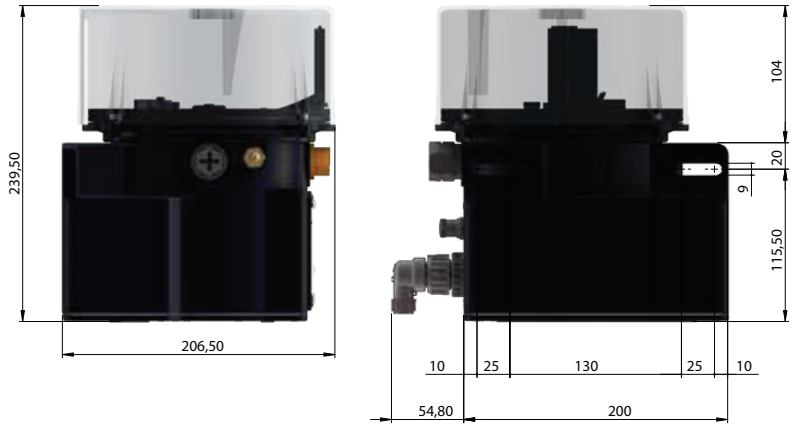

ELECTRIC GREASE PUMP ILC-MAX-G 2 (115/230 V AC)

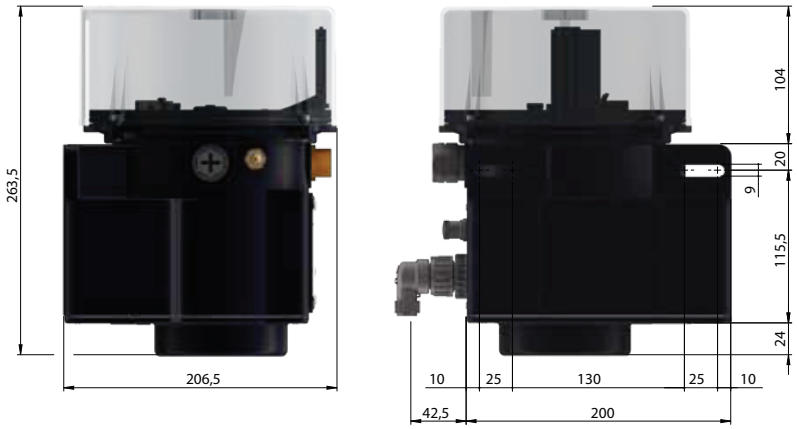

Technical Features

NUMBER OF OUTLETS	FROM 1 TO 3
DISCHARGE PER REV WITH FIXED PUMPING	0.16 CC
DISCHARGE PER REV WITH ADJUSTABLE PUMPING	0.01 – 0.16 CC
RPM	23 rpm (12 V DC) / 22 rpm (24 V DC) / 29 rpm (230 V AC) / 31 rpm (115 V AC)
DISCHARGE PER MINUTE WITH FIXED PUMPING	3,68 cm^3 (12 V DC) / 3,52 cm^3 (24 V DC) / 4,64 cm^3 (230 V AC) / 4,96 cm^3 (115 V AC)
DISCHARGE PER MINUTE WITH ADJUSTABLE PUMPING	0,23 - 3,68 cm^3(12 V DC) / 0,22 - 3,52 cm^3(24 V DC) / 0,29 - 4,64 cm^3(230 V AC) / 0,31 - 4,96 cm^3(115 V AC)
SUITABLE LUBRICANTS	GREASE UP TO A CONSISTENCY NLGI NO. 2
MAXIMUM OPERATING PRESSURE	275 bar (3993 PSI)
TANK CAPACITY	2 KG -TRANSPARENT
TEMPERATURE	FROM - 20 ºC TO + 80 ºC
DELIVERY FITTING	1 / 4" G
MINIMUM ELECTRIC LEVEL	1 A 140 V AC – 200 V DC 10 W NO When the tank is empty, a pulse from open to closed is created at each rotation
ROTATION CONTROL	1 A 140 V AC – 200 V DC 10 W NO –The contact closes at each rotation

ELECTRIC GREASE PUMP ILC-MAX-G 4 (12/24 V DC – 24 V AC)

ELECTRIC GREASE PUMP ILC-MAX-G 4 (115/230 V AC)

Technical Features

NUMBER OF OUTLETS	FROM 1 TO 3
DISCHARGE PER REV WITH FIXED PUMPING	0.16 CC
DISCHARGE PER REV WITH ADJUSTABLE PUMPING	0.01 – 0.16 CC
RPM	23 rpm (12 V DC) / 22 rpm (24 V DC) / 29 rpm (230 V AC) / 31 rpm (115 V AC)
DISCHARGE PER MINUTE WITH FIXED PUMPING	3,68 cm^3 (12 V DC) / 3,52 cm^3 (24 V DC) / 4,64 cm^3 (230 V AC) / 4,96 cm^3 (115 V AC)
DISCHARGE PER MINUTE WITH ADJUSTABLE PUMPING	0,23 - 3,68 cm^3(12 V DC) / 0,22 - 3,52 cm^3(24 V DC) / 0,29 - 4,64 cm^3(230 V AC) / 0,31 - 4,96 cm^3(115 V AC)
SUITABLE LUBRICANTS	GREASE UP TO A CONSISTENCY NLGI NO. 2
MAXIMUM OPERATING PRESSURE	275 bar (3993 PSI)
TANK CAPACITY	4 KG -TRANSPARENT
TEMPERATURE	FROM - 20 ºC TO + 80 ºC
DELIVERY FITTING	1 / 4" G
MINIMUM ELECTRIC LEVEL	1 A 140 V AC – 200 V DC 10 W NO When the tank is empty, a pulse from open to closed is created at each rotation
ROTATION CONTROL	1 A 140 V AC – 200 V DC 10 W NO –The contact closes at each rotation

GREASE ELECTRIC PUMP ILC-MAX-G 5 (12/24 V DC – 24 V AC)

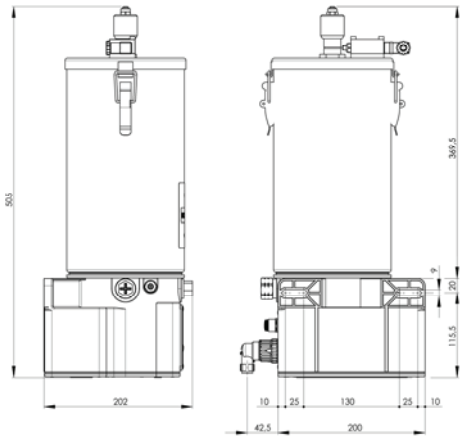

GREASE ELECTRIC PUMP ILC-MAX-G 5 (115/230 V AC)

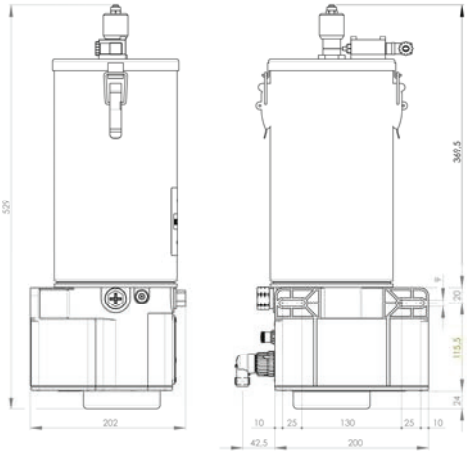

TECHNICAL DATA

NUMBER OF OUTLETS	FROM 1TO 3
DISCHARGE/ROPE WITH FIXED PUMPING ELEMENT	0.16 CC
DISCHARGE/ROPE WITH ADJUSTABLE PUMPING ELEMENT	0.01 – 0.16 CC
RPM	23 rpm (12 V DC) - 22 rpm (24 V DC) - 29 rpm (230 V AC) - 31 rpm (115 V AC)
DISCHARGE/MIN WITH FIXED PUMPING ELEMENT	3,68 cm^3(12 V DC) / 3,52 cm^3 (24 V DC) / 4,64 cm^3 (230 V AC) / 4,96 cm^3 (115 V AC)
DISCHARGE/MIN WITH ADJUSTABLE PUMPING ELEMENT	0,23 – 3,68 cm^3(12 V DC) / 0,22 – 3,52 cm^3 (24 V DC) / 0,29 – 4,64 cm^3 (230 V AC) / 0,31 – 4,96 cm^3 (115 V AC)
SUITABLE LUBRICANTS	GREASE NLGI 1 and 2 CONSISTENCY
MAX. COUNTERPRESSURE	275 BAR (3993 PSI) ±10%
RESERVOIR CAPACITY	5 KG - METALLIC
TEMPERATURE	FROM - 20 ºC TO + 80 ºC
OUTLET CONNECTION	1 / 4" G
LOW LEVEL SWITCH	5A – 250 V AC / 0.4 A - 125 V DC – NC o NO contact

ELECTRIC GREASE PUMP ILC-MAX-G 8 (12/24 V DC – 24 V AC)

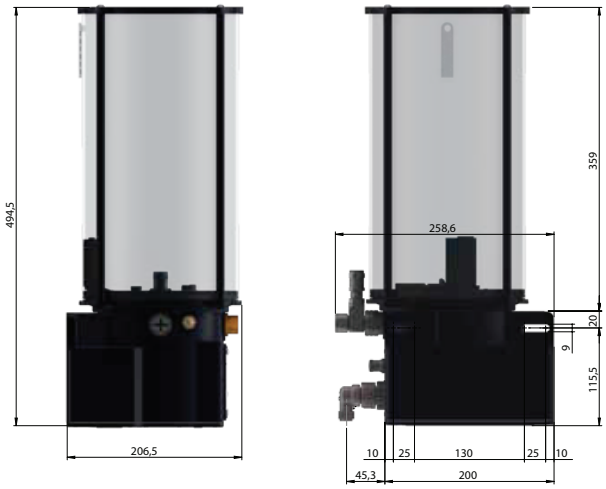

ELECTRIC GREASE PUMP ILC-MAX-G 8 (115/230 V AC)

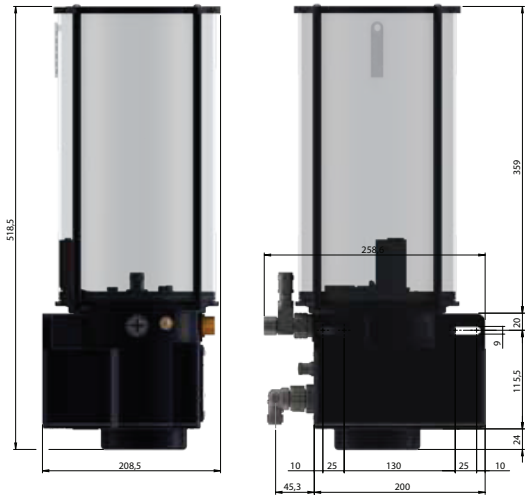

Technical Features

NUMBER OF OUTLETS	FROM 1 TO 3
DISCHARGE PER REV WITH FIXED PUMPING	0.16 CC
DISCHARGE PER REV WITH ADJUSTABLE PUMPING	0.01 – 0.16 CC
RPM	23 rpm (12 V DC) / 22 rpm (24 V DC) / 29 rpm (230 V AC) / 31 rpm (115 V AC)
DISCHARGE PER MINUTE WITH FIXED PUMPING	3,68 cm^3 (12 V DC) / 3,52 cm^3 (24 V DC) / 4,64 cm^3 (230 V AC) / 4,96 cm^3 (115 V AC)
DISCHARGE PER MINUTE WITH ADJUSTABLE PUMPING	0,23 - 3,68 cm^3(12 V DC) / 0,22 - 3,52 cm^3(24 V DC) / 0,29 - 4,64 cm^3(230 V AC) / 0,31 - 4,96 cm^3(115 V AC)
SUITABLE LUBRICANTS	GREASE UP TO A CONSISTENCY NLGI NO. 2
MAXIMUM OPERATING PRESSURE	275 bar (3993 PSI)
TANK CAPACITY	8 KG -TRANSPARENT
TEMPERATURE	FROM - 20 ºC TO + 80 ºC
DELIVERY FITTING	1 / 4" G
MINIMUM ELECTRIC LEVEL	1 A 140 V AC – 200 V DC 10 W NO When the tank is empty, a pulse from open to closed is created at each rotation
ROTATION CONTROL	1 A 140 V AC – 200 V DC 10 W NO –The contact closes at each rotation

OIL ELECTRIC PUMP ILC-MAX-O 2 (12/24 V DC – 24 V AC)

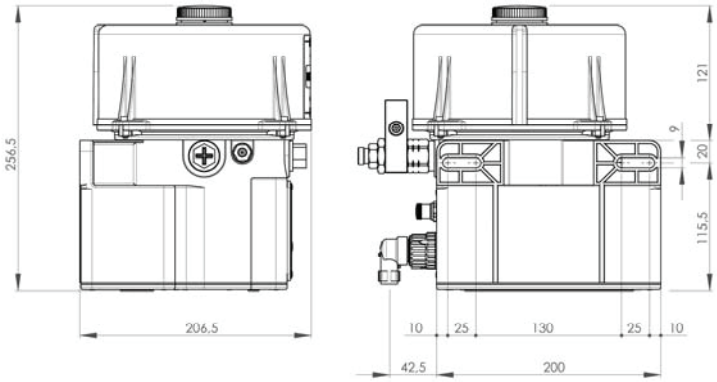

OIL ELECTRIC PUMP ILC-MAX-O 2 (115/230 V AC)

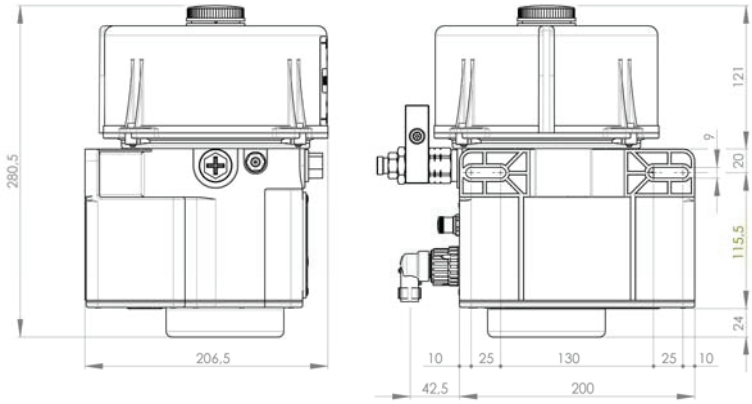

TECHNICAL DATA

NUMBER OF OUTLETS	FROM 1TO 3
DISCHARGE/ROPE WITH FIXED PUMPING ELEMENT	0.16 CC
DISCHARGE/ROPE WITH ADJUSTABLE PUMPING ELEMENT	0.01 – 0.16 CC
RPM	23 rpm (12 V DC) - 22 rpm (24 V DC) - 29 rpm (230 V AC) - 31 rpm (115 V AC)
DISCHARGE/MIN WITH FIXED PUMPING ELEMENT	3,68 cm^3(12 V DC) / 3,52 cm^3 (24 V DC) / 4,64 cm^3 (230 V AC) / 4,96 cm^3 (115 V AC)
DISCHARGE/MIN WITH ADJUSTABLE PUMPING ELEMENT	0,23 – 3,68 cm^3(12 V DC) / 0,22 – 3,52 cm^3 (24 V DC) / 0,29 – 4,64 cm^3 (230 V AC) / 0,31 – 4,96 cm^3 (115 V AC)
SUITABLE LUBRICANTS	MINERAL OILS 50-1500 cSt
MAX. COUNTERPRESSURE	275 BAR (3993 PSI) ±10%
RESERVOIR CAPACITY	2 L - PLASTIC
TEMPERATURE	FROM - 20 ºC TO + 80 ºC
OUTLET CONNECTION	1 / 4" G
LOW LEVEL SWITCH	1 A 140 V AC – 200 V DC 10 W NO - Contact opens when reservoir is empty

OIL ELECTRIC PUMP ILC-MAX-O 4 (12/24 V DC – 24 V AC)

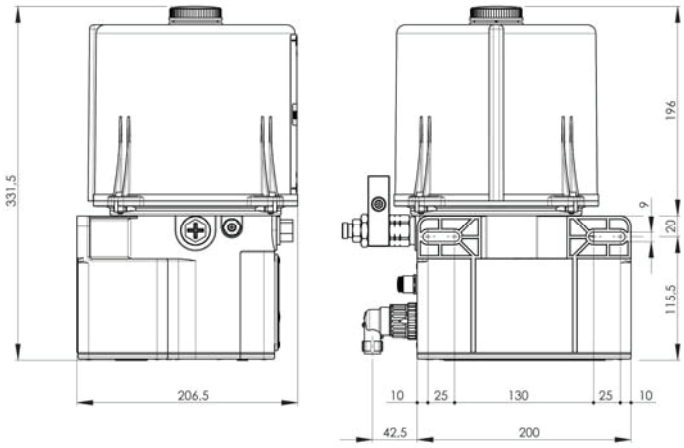

OIL ELECTRIC PUMP ILC-MAX-O 4 (115/230 V AC)

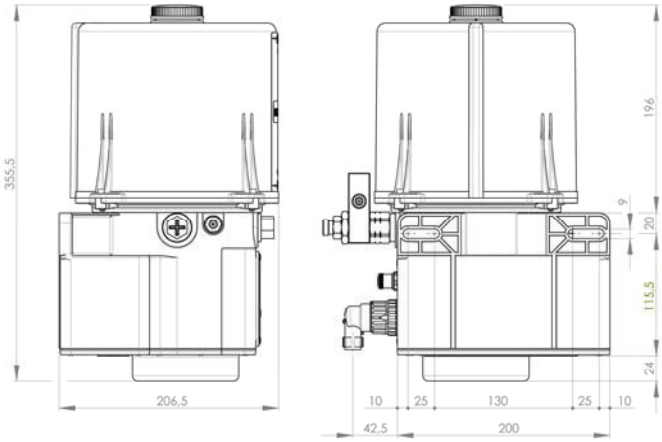

TECHNICAL DATA

NUMBER OF OUTLETS	FROM 1TO 3
DISCHARGE/ROPE WITH FIXED PUMPING ELEMENT	0.16 CC
DISCHARGE/ROPE WITH ADJUSTABLE PUMPING ELEMENT	0.01 – 0.16 CC
RPM	23 rpm (12 V DC) - 22 rpm (24 V DC) - 29 rpm (230 V AC) - 31 rpm (115 V AC)
DISCHARGE/MIN WITH FIXED PUMPING ELEMENT	3,68 cm^3(12 V DC) / 3,52 cm^3 (24 V DC) / 4,64 cm^3 (230 V AC) / 4,96 cm^3 (115 V AC)
DISCHARGE/MIN WITH ADJUSTABLE PUMPING ELEMENT	0,23 – 3,68 cm^3(12 V DC) / 0,22 – 3,52 cm^3 (24 V DC) / 0,29 – 4,64 cm^3 (230 V AC) / 0,31 – 4,96 cm^3 (115 V AC)
SUITABLE LUBRICANTS	MINERAL OILS 50-1500 cSt
MAX. COUNTERPRESSURE	275 BAR (3993 PSI) ±10%
RESERVOIR CAPACITY	4 L - PLASTIC
TEMPERATURE	FROM - 20 ºC TO + 80 ºC
OUTLET CONNECTION	1 / 4" G
LOW LEVEL SWITCH	1 A 140 V AC – 200 V DC 10 W NO - Contact opens when reservoir is empty

OIL ELECTRIC PUMP ILC-MAX-O 5 (12/24 V DC – 24 V AC)

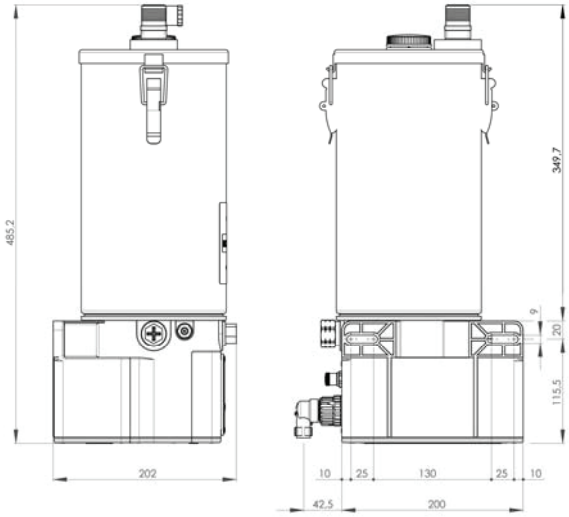

OIL ELECTRIC PUMP ILC-MAX-O 5 (115/230 V AC)

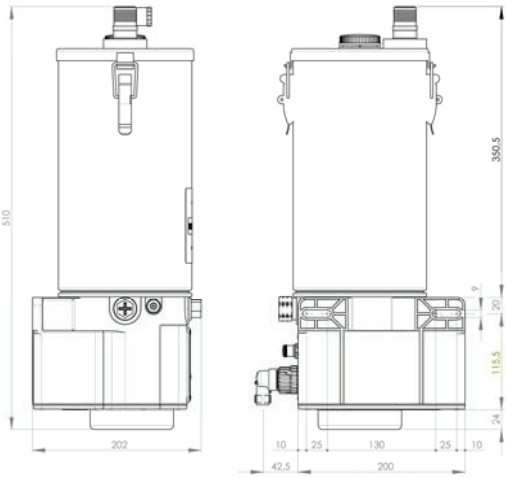

TECHNICAL DATA

NUMBER OF OUTLETS	FROM 1TO 3
DISCHARGE/ROPE WITH FIXED PUMPING ELEMENT	0.16 CC
DISCHARGE/ROPE WITH ADJUSTABLE PUMPING ELEMENT	0.01 – 0.16 CC
RPM	23 rpm (12 V DC) - 22 rpm (24 V DC) - 29 rpm (230 V AC) - 31 rpm (115 V AC)
DISCHARGE/MIN WITH FIXED PUMPING ELEMENT	3,68 cm^3(12 V DC) / 3,52 cm^3 (24 V DC) / 4,64 cm^3 (230 V AC) / 4,96 cm^3 (115 V AC)
DISCHARGE/MIN WITH ADJUSTABLE PUMPING ELEMENT	0,23 – 3,68 cm^3(12 V DC) / 0,22 – 3,52 cm^3 (24 V DC) / 0,29 – 4,64 cm^3 (230 V AC) / 0,31 – 4,96 cm^3 (115 V AC)
SUITABLE LUBRICANTS	MINERAL OILS 50-1500 cSt
MAX. COUNTERPRESSURE	275 BAR (3993 PSI) ±10%
RESERVOIR CAPACITY	5 L - METALLIC
TEMPERATURE	FROM - 20 ºC TO + 80 ºC
OUTLET CONNECTION	1 / 4" G
LOW LEVEL SWITCH	1.5 A 250 V AC – 200 V DC 50 W – NC o NO contact

OIL ELECTRIC PUMP ILC-MAX-O 8 (12/24 V DC – 24 V AC)

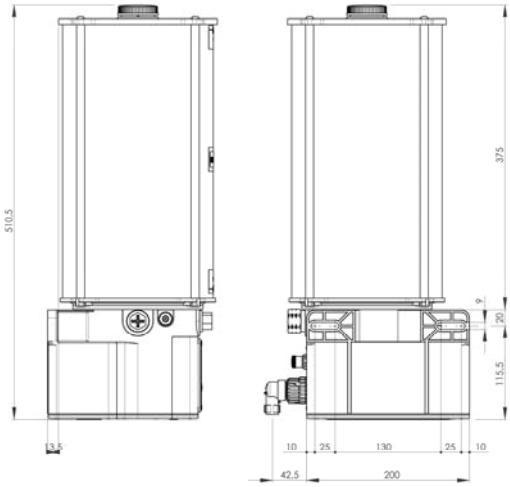

OIL ELECTRIC PUMP ILC-MAX-O 8 (115/230 V AC)

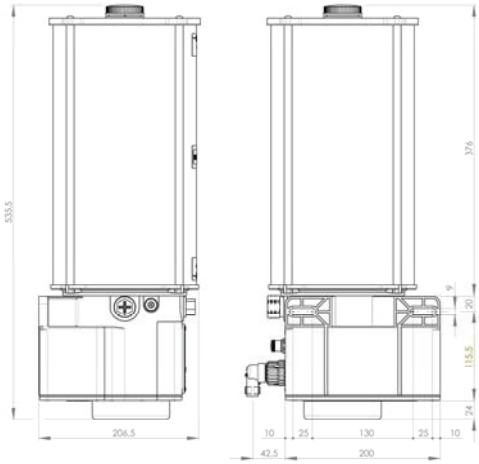

TECHNICAL DATA

NUMBER OF OUTLETS	FROM 1TO 3
DISCHARGE/ROPE WITH FIXED PUMPING ELEMENT	0.16 CC
DISCHARGE/ROPE WITH ADJUSTABLE PUMPING ELEMENT	0.01 – 0.16 CC
RPM	23 rpm (12 V DC) - 22 rpm (24 V DC) - 29 rpm (230 V AC) - 31 rpm (115 V AC)
DISCHARGE/MIN WITH FIXED PUMPING ELEMENT	3,68 cm^3(12 V DC) / 3,52 cm^3 (24 V DC) / 4,64 cm^3 (230 V AC) / 4,96 cm^3 (115 V AC)
DISCHARGE/MIN WITH ADJUSTABLE PUMPING ELEMENT	0,23 – 3,68 cm^3(12 V DC) / 0,22 – 3,52 cm^3 (24 V DC) / 0,29 – 4,64 cm^3 (230 V AC) / 0,31 – 4,96 cm^3 (115 V AC)
SUITABLE LUBRICANTS	MINERAL OILS 50-1500 cSt
MAX. COUNTERPRESSURE	275 BAR (3993 PSI) ±10%
RESERVOIR CAPACITY	8 L - PLASTIC
TEMPERATURE	FROM - 20 ºC TO + 80 ºC
OUTLET CONNECTION	1 / 4" G
LOW LEVEL SWITCH	1 A 140 V AC – 200 V DC 10 W NO - Contact opens when reservoir is empty

HOW TO ORDER

40.2.24AC.FST.G

RESERVOIR	
2 *= 2 Kg transparent*	
4 *= 4 Kg transparent*	
8 *= 8 Kg transparent*	
5 *= 5 Kg metallic*	
TENSION	
12DC *= 12 V DC*	
24DC *= 24 V DC*	
24AC *= 24 V AC*	
115V *= 115 V AC*	
230V *= 230 V AC*	
PUMPING ELEMENT	
F *= fixed discharge*	
R *= adjustable discharge*	
TIMER	
CT *= with timer*	
ST *= without timer*	
LUBRICANT	
G *= grease consistency 1 and 2*	
O *= oil consistency 50-1500 cSt*	
S *= soft grease consistency 0,00 and 000*	

*All the pumps are equipped with **lubricant low level switch** and grease pumps (not oil ones) with 2, 4 and 8 kg reservoir are equipped with **electrical control of motor rotation**.*
***Models with timer** are equipped with 7-poles TYCO connector and 4-poles M12x1 one; **models without timer** are equipped with only 7-poles TYCO connector.*

PUMP MOUNTING
Pumps must be secured in a vertical position by two bolts, nuts and washers through integrated mounting bracket of pump body

DPX ASSEMBLED ON PUMP

ILC-MAX is set up to be assembled with a DPX from 3 to 9 elements mounted directly under the pump base.

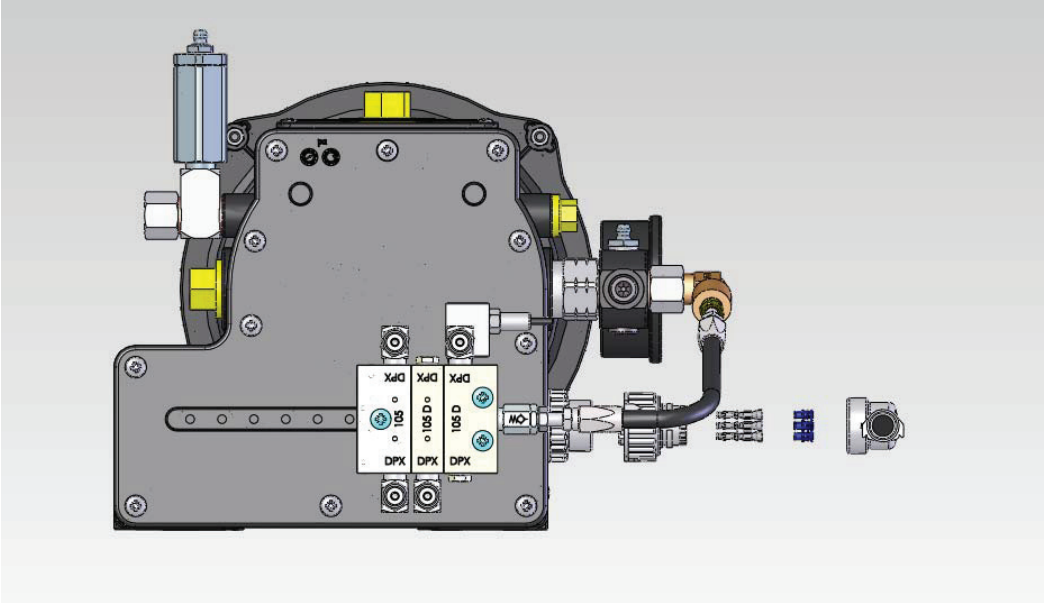

40.KRT.001
Kit to assemble ILC-MAX with DPX

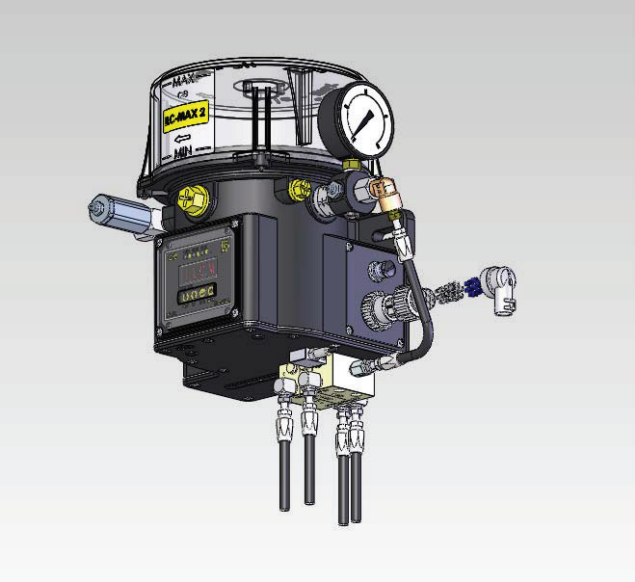

Safety Precautions

1) Comply with all safety regulations applicable at the locality where the tasks are performed.

2) Always take the necessary precautions to prevent potentially dangerous situations from occurring during installation, checking and maintenance. Always apply or use adequate safety measures to prevent personal injury and material damage, before starting work on the equipment.

3) The electrical system of the equipment must be disconnected before any work is performed.

4) The pressurized air system of the equipment must be drained of all air and pressure.

5) Inquire with the facilities management to the prescribed procedure to immobilize equipment and prevent operation of equipment. When these are not prescribed, remove any means that can start the equipment (ignition key / main power switch) and place indicator tags to show others not to start the equipment.

6) Never work underneath a machine, vehicle, bucket or other equipment, which is raised by a jack only. Always use a jack stand and check that the ground is firm and sufficiently flat.

7) Keep in mind that a vehicle with air suspension may drop of its own accord.

8) Only work underneath a cab if it is fully tilted and latched, or otherwise secured preventing accidental return-tilt.

9) Disconnect the ground battery lead from the vehicle's battery. This prevents electrical equipment from being inadvertently activated or otherwise electrically damaged.

10) Avoid working on a machine, vehicle or other equipment that recently was in use to allow components to cool (coolant, exhaust, turbo, etc).

11) A vehicle, machine or other equipment may only be operated by those who are trained and licensed to do so and are aware of all possible dangers.

12) Only use tools that fit and are designed for the specific task.

13) *Adhere to all regulations, specifications and limitations as specified by the manufacturer of the machine, vehicle, equipment and/or engine.*

Keep the environment in which you work clean for you and others.

Automatic Centralized Lubrication System

Note: Not all options or parts configurations may be used in your particular system.

The electric pump contains either a 12 or 24 VDC, a 110/220 VAC drive motor, as well as available for stationery applications. A gear reducer built in to the lower portion of the motor/gear housing turns the output shaft/paddle/wiper arm assembly at a speed of approximately 22 RPM (RPM's vary slightly with different pump voltages) as well as ambient temperature and grease types. The rotation is clockwise as viewed from the top of the pump. The action of the paddle forces lubricant down into the pump body.

A cam assembly affixed to the vertical shaft positively engages with the piston of 1 to 3 pumping elements. The engagement configuration is termed "Desmodronic" i.e. the piston of the pumping element is both pushed and pulled by the cam, there is no return spring.

Care should be exercised whenever refilling the reservoir to minimize the introduction of contaminants into the pump and the lubricant distribution system. ***Dirt will cause a malfunction of the metering block assemblies.***

Pumping Elements

There are two different types of pumping elements used in the pump. A fixed output and a variable output pumping element. Fixed output pumping elements have no adjustment capability.

Caution should be used when replacing any pumping unit (To see the document on replacing turn to page 97), as the installation procedure is tricky and can result in the piston becoming lodged within the pump body. When inserting a pumping element into the pump body, the paddle/wiper assembly should be positioned on the side of the reservoir closest to the pumping element port. After installing a pumping element, always run the pump and check for lubricant metered at the outlet. If no lubricant is being pumped, it may be necessary to prime the pumping element. To do so, remove the pressure gauge and temporarily replace it with a standard 1/8" NPT zerk fitting. Pump lubricant into this zerk fitting with the pump running, this will prime the pumping element. Remove the zerk fitting and replace the pressure gauge. Verify by observing the fluctuations in the pressure gauge needle, which confirms lubricant is being pumped.

High Pressure Indication

Both types of pumping elements have a pressure relief valve that is set to relieve excess pressure at approximately 3,500-4,000 PSI. In the event that system pressure is greater than 3,500 psi, (which may be due to a malfunctioning metering block or a lubrication point that does not "take" lubricant) lubricant is expelled via a port located on the end of the pumping element. The ***presence of lubricant at this port is not normal*** and would indicate a system problem.

Some systems may have a micro switch, which is fastened to the primary divider valve. In the event of a high-pressure situation, the switch is not able to actuate and a fault light (and audible alarm if so equipped) is activated. On a system with 2 pumping elements, the pressure gauge reading indicates which distribution system is working at high pressure.

Pressure Gauge(s)

Normal system pressure is dependent on a variety of factors. The overall tubing run lengths, total number of lubrication points, type of lubricant used, and the quantity of metering block assemblies within the system are all factors. In addition, ambient temperature will be a factor determining the normal pressure for a given system. Pressure fluctuations indicate the pumping elements are metering lubricant to the lubrication points. A pressure reading greater than 3,500-4,000 psi indicates excessive pressure in the form of a malfunctioning metering block and/or a lubrication point that does not "take" grease.

Distribution System(s)

Lubricant is metered via high-pressure tubing to a primary divider valve assembly. The primary divider valveassembly then splits the volume of lubricant to secondary divider valve assemblies per a specific ratio calculated for each type of machine installation. All outputs on the primary block assemblies have one-way check valves installed to prevent any backpressure from the secondary distribution valves or lube points.

The divider valve assemblies are modular in design. Each assembly may contain at least (3) elements and a maximum of (12) elements. The inlet portion of the block is termed the Starting element. The next components are termed Mid elements.

These components and the final component, termed the End element, are marked with a stamped number that indicates the size of the piston bore contained within that element. There are four sizes, 25, 45, 75 and 105. They represent .025, .045, .075 and .105 cc. for each stroke of the piston. The clearances between the piston and bore are measured in microns; ***dirt cannot be tolerated in these elements***. Each element has two outlets and therefore will meter the quantity designated from each port. The output of some elements has been doubled. This is indicated on the attached drawings by an asterisk next to the element size designation.

To double an element's output a port pin and seat ball located inside the valve has been removed via a 2mm Allen wrench. By removing the port pin and seat ball a 25 becomes a 50, a 45 becomes a 90, a 75 becomes a 150 and a 105 is then a 210.

Lubricant output may be taken from either side of the valve. Some assemblies also use bridges that effectively allow the output from one element to be fed through another and then out to the lube point or secondary valve assembly.

Secondary divider valve assemblies distribute lubricant to specific lubrication points. In most applications, 8 mm O.D. tubing is used for all tubing runs from the primary valve to the secondary valve(s) and from the secondary valve(s) to the lubrication points. 11.3mm hose will be commonly found on excavators feeding divider valves that are mounted at a considerable distance from the lubrication pump.

The movement of lubricant through the distribution block is sequential. As the lubricant enters the starting element it causes the piston in that element to move either right or left, depending upon its previous position. The piston in the next mid-element then moves in the opposite direction of the first. The next piston then moves in the same manner as that of the first element. Essentially each subsequent piston position is opposite that of the previous. The operation of the pistons is similar to that of an internal combustion engine, in that if one piston cannot be moved, all pistons will not move. Lubricant is metered in a sequential manner through the valve until the process begins anew after the valve has cycled lubricant through all of the discharge ports on that assembly.

The advantage of the series progressive design inherent in the *Relia***MAX** metering block is that output ports cannot be "deadheaded" or plugged. ***Any blocked outlet causes high pressure throughout the distribution system and essentially prohibits flow to any other lubrication points.***

Lubricants

The pump is capable of pumping an NLGI # 2 grade lubricant at temperatures down to -35ºC. In certain applications, the use of an NLGI # 2 lubricant is not advised, specifically extreme or extended exposure to sub zero temperatures. The specific properties of the lubricant should be considered as to its suitability in low temperature applications. Consult the technical data bulletin of the lubricant and/or the lubricant supplier as to its use in centralized lubrication systems.

The use of lubricants using Bentone (clay) type thickeners should be avoided. We have extensive data on all types of lubricants and can also provide lubricants for your system that offer unparalleled performance and protection to the machine components. We strongly suggest the use of Lubrication Engineers lubricants.

Reservoir Refilling

When refilling the reservoir be sure to clean the inlet port on the pump thoroughly and any other hardware used so as not to introduce contaminants into the pump. Every pump is fitted with a low–level option. Also, when refilling the reservoir pay close attention to the level of the reservoir. If you overfill the pump you may clog the air breather tube in the top of the reservoir that allows air into the reservoir to allow the grease level to drop down inside the container while the lubricant is being consumed during normal operation.

See page 68 for more information on filling the reservoir or scan the QR code on the right:

Scan the QR code above to Watch our video on Filling Options

Quick Overview Pump Operation

The electric pump meters grease to the primary progressive divider valve. The primary valve distributes the grease in the correct volumes to the secondary divider valves. Pistons force the grease in a certain direction, so that it cannot choose the path of least resistance. The progressive design ensures positive delivery to each lubrication point. Grease cannot go to the path of least resistance. The solid state controller manages lube cycle time as well as delay time providing for optimum delivery volume.

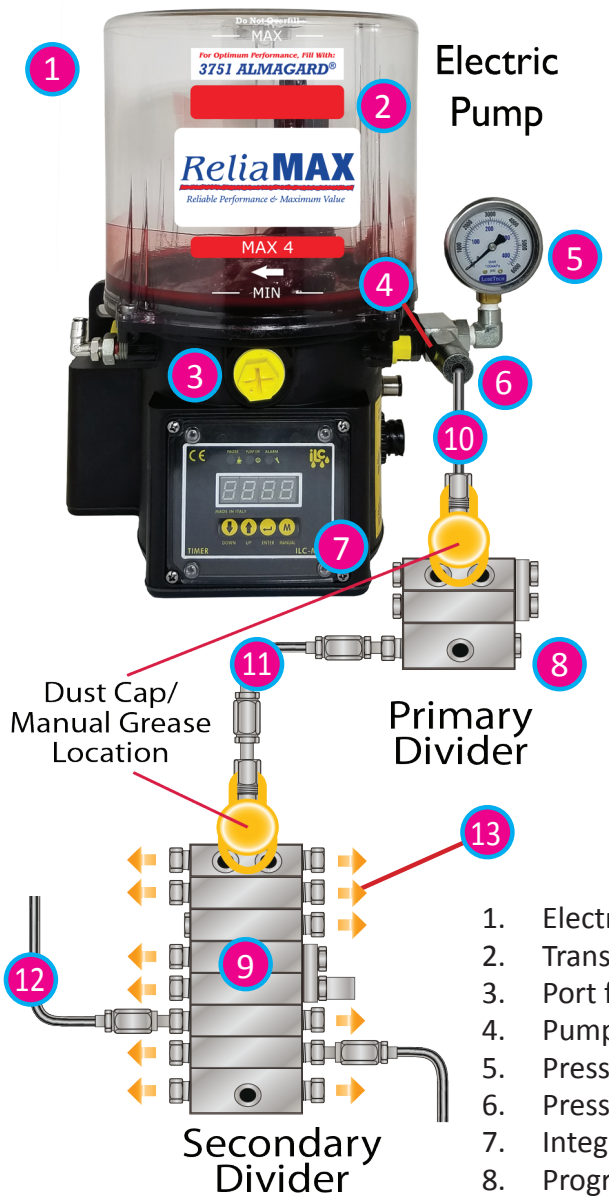

When an automatic greasing system is used, time-consuming, manual lubrication is largely replaced. ***However***, do not forget that, for example, the universal joints still have to be greased manually.

If a high pressure washer is used to clean the vehicle or installation, ***using it on the lubrication system pump should be avoided*** - this will prevent any possible entry of water through the venting openings.

DO NOT PRESSURE WASH PUMP!

The pump is programmed to run for a number of rotations or a specific run time, then go into a delay/sleep mode.

1) Automatic 2) Wired to Ignition 3) Retains memory.

1. Electric grease pump
2. Transparent reservoir
3. Port for filling the reservoir
4. Pump element
5. Pressure gauge
6. Pressure-Relief Valve
7. Integrated timer
8. Progressive primary divider
9. Progressive secondary divider
10. Primary feed line
11. Secondary feed line
12. Tail lines to lubrication points
13. Discharge ports

Common Sense must be applied to insure the proper operation and protection of all the machine's lubricated components.

Scan For More Information

Basic Pump Operation

GREEN LIGHT ON - Pump is in delay mode (PAUSE) - **NO DISPLAY**

YELLOW LIGHT FLASHING - Pump paddles rotates, pump is metering grease and pressure gauge is moving (PUMP ON) - **DISPLAY COUNTS DOWN**

RED LIGHT ON - Pump is in "FAULT", low level or (if equipped) no lube
DISPLAY SHOWS FAULT CODE - Acoustic indicator is activated (ALARM if equipped)

GREEN, YELLOW, RED LIGHTS FLASHING - Pump **BLOCKED**

Use the correct lubricant- failure to do so may void your warranty

Divider Valves are equipped with zerk fittings for system diagnostics or to allow greasing in the unlikely event of a pump issue 8 9

Check for the following:

1) Lube level goes down - consumption should be consistent with run time
2) Lube appears at lube points
3) Paddle rotates & gauge shows pressure approximately 1k PSI when in operation
4) Yellow light will flash - indicating pump is on

Practice cleanliness when refilling

Discharge of lubricant from pressure relief valve-indicates a blockage. 6

Inspect all hose & tubing runs for leakage, damage, chafing and confirm presence of lubricant ***WEEKLY!***

Report any/all line damage, leaks, or system malfunctions immediately to maintenance.

Fill Slowly - DO NOT FILL ABOVE MAX LINE

NEVER BLOCK a discharge port 13
NEVER CAP a tubing run 12

CAUTION! Risk of bursting if the reservoir is overfilled! When filling the reservoir by means of pumps with a large delivery volume do not exceed the maximum filling mark.
ATTENTION! When filling the reservoir, make sure that the air can escape through the vent

Wiring Guide

Pos	Code	Description	Qty
1	A91111353	Connettore M12x1 femmina 90° 4P PVC L=0.5 MT 90° female connection M12x1 4P PVC L=0.5 MT	1
2	A91111352	Connettore 90° M12x1 4P maschio XZCC12FCM40B 90° male connection M12x1 4P XZCC12FCM40B	1

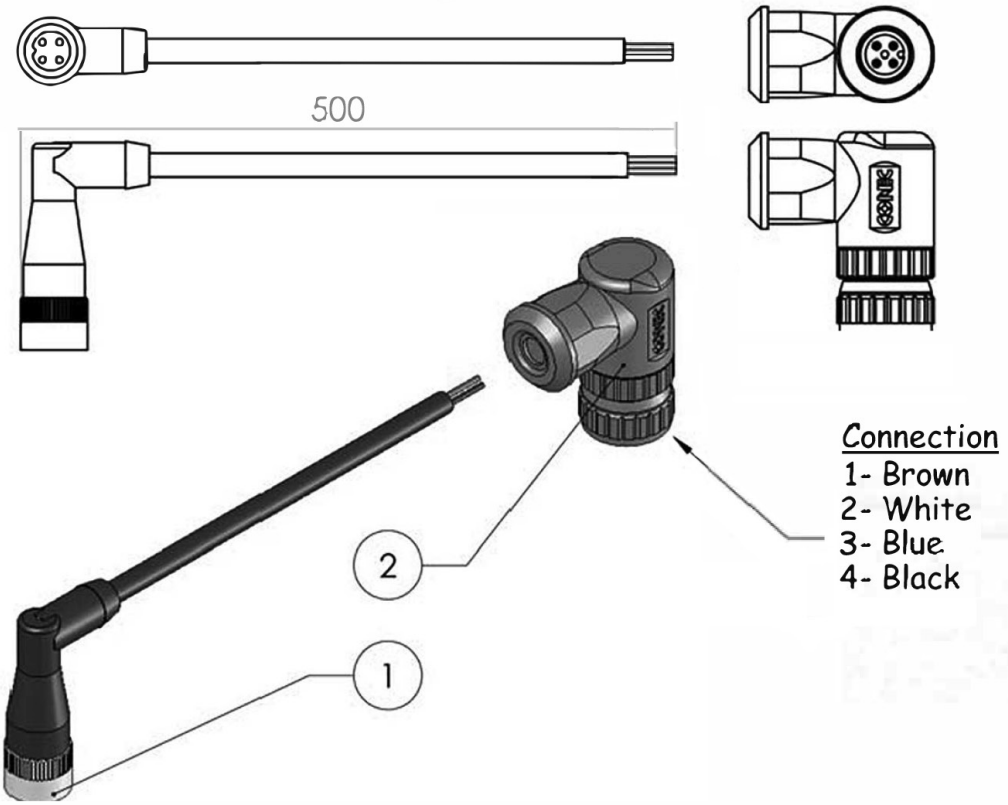

Tools needed for this job are

1) *Relia***MAX** Power Cord kit (provided)
2) Basic pair of dikes or snips
3) ***Delphi Packard Weatherpack Crimper Tool Kit***
   CrimpTool for 22-14 Gauge Delphi Metri-Pack
   150, 280 & Weather-Pack Terminals
4) Wire Strippers
5) Diagrams (provided)
6) 2 or 7 wire cable (provided)

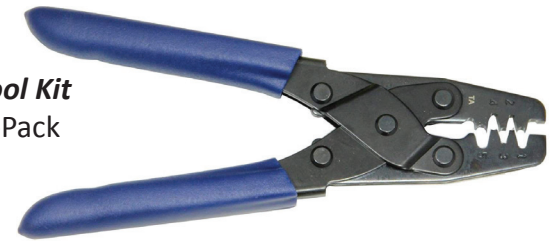

Scan the QR code above to Watch our video on Pump Power Cable Assembly

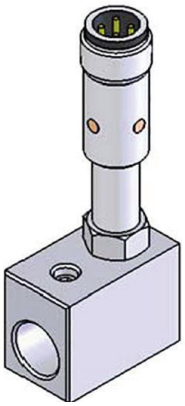

SENSORE INDUTTIVO
CONNETTORE M12x1
DPA-DPM PNP "NO"
COD.49.052.8

PROXIMITY SWITCH
M12X1 CONNECTOR
DPA-DPM PNP "NO"
CODE 49.052.8

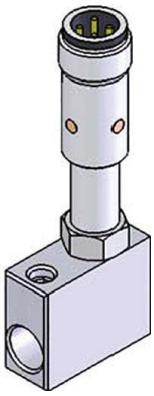

SENSORE INDUTTIVO
CONNETTORE M12x1
DPX PNP "NO"
COD.49.052.9

PROXIMITY SWITCH
M12X1 CONNECTOR
DPX PNP "NO"
CODE 49.052.9

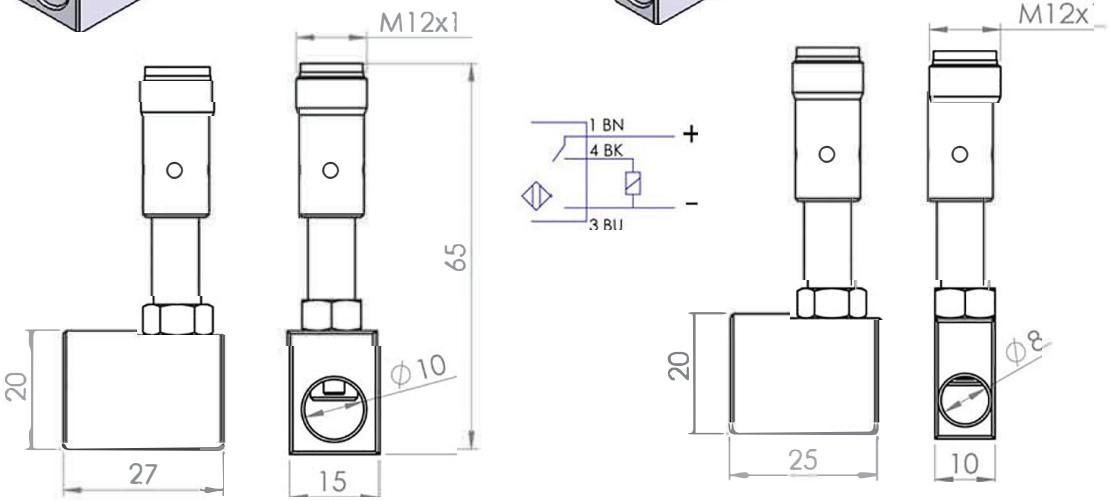

CAVO ELETTRICO DA ORDINARE SEPARATAMENTE

ELECTRICAL CABLE TO BE ORDER SEPARATELY

40.CDC.4.05 L= 5 MT
40.CDC.4.10 L= 10 MT
40.CDC.4.15 L= 15 MT

Connessioni / Connection

1- Marrone / Brown
2-Bianco / White
3-Blu/ Blue
4-Nero / Black

PROIEZIONE / PROJECTION	TOLLERANZE GENERALI /GENERAL TOLERANCE				DATA / DATE 04/10/12
	≤ 100	≥ 100 ≤ 300	≥ 300 ≤ 1000	FORI	
	± 0.20	± 0.30	± 0.40	H12	DISEGNATO / DRAWN BALLARATI
MATERIALE / MATERIAL	TOLLERANZE PARTI FUSE / SMELTING TOLERANCE				
	SPESSORI/THICKNESS ± 10% SPESSORI/THICKNESS ≤ 10 mm ± 1 mm				CONTROLLATO / CHECK
TRATTAMENTO /TREATMENT	SEGNI DI LAVORAZIONE / WORKING TOLERANCE				
	LAVORAZIONI GENERALI GENERAL WORKING	ALTRE LAVORAZIONI WORKING			SCALA/SCALE 1:1
PESO / WEIGHT 21.86					

QUESTO DISEGNO È DI PROPRIETÀ ESCLUSIVA DELLA -ILC- IMPIANTI DI LUBRIFICAZIONE CENTRALIZZATA S.R.L. A TERMINI DI LEGGE ESSA VIETA DI RIPRODURLO O COMUNICARLO A DITTE CONCORRENTI O AD ALTRI SENZA LA SUA ESPRESSA AUTORIZZAZIONE

UFFICIO TECNICO
GORLA MINORE

DENOMINAZIONE / DESCRIPTION
Controllo di fine ciclo con sensore induttivo PNP NO connettore M12x1
Proximity switch PNP NO connector M12x1

CODICE N°/ CODE
ConnettoriM12x1

WIRES

ILC-MAX pump is supplied complete with 7-pole electrical connector.

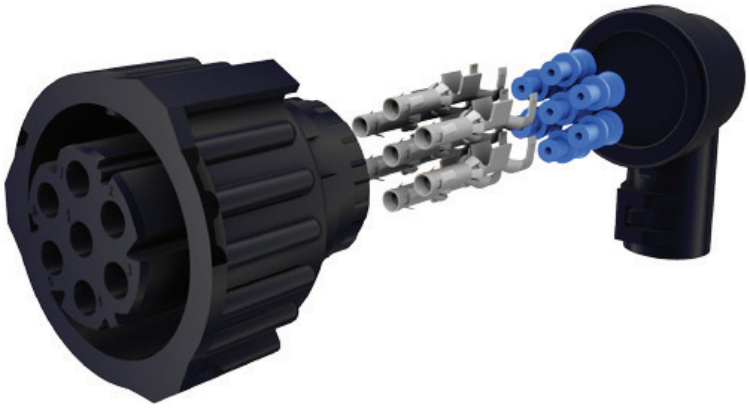

A91.111327

N.B. Included in the kit are 3 types of pads for different diameters and unused contacts.

n. 7 code A91.111315
wires from 1.2 to 2.1 mm²

n. 7 code A91.111314
wires from 2.2 to 3 mm²

n. 7 code A91.111310
to plug the hole if a contact is not used

We can supply electrical connector complete with 3 wires (1 mm²) cable

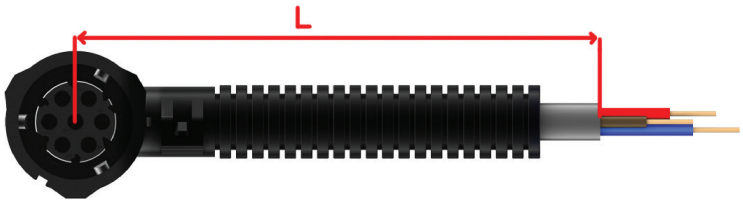

code	L
40.CBL.3.05	5 M
40.CBL.3.10	10 M
40.CBL.3.15	15 M

As alternative, we can supply electrical connector complete with 7 wires (1 mm²) cable

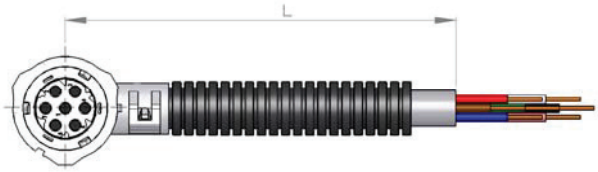

code	L
40.CBL.7.05	5 M
40.CBL.7.10	10 M
40.CBL.7.15	15 M

NOTES:

Wiring Guide for Pumps with External Controller

1) Identify the mounting location for the timer box controller on the equipment. This is generally located on the passenger side of the machine near the operator's seat.

At this time the pump power cable should be routed into the cab.

2) Using the supplied mounting hardware, install the timer box controller to the mounting location identified in Step 1

3) Connect the pump power cable to the *Relia***MAX** Control Box using the External Control Wiring Diagram on the following page. Route the cable behind a cab cover panel.

NOTE: You may need to remove a cab cover panel to route the cable. The cable should be routed toward the *Relia***MAX** power cable near the cab floor.

GREASE LOW LEVEL SWITCH WITHOUT TIMER

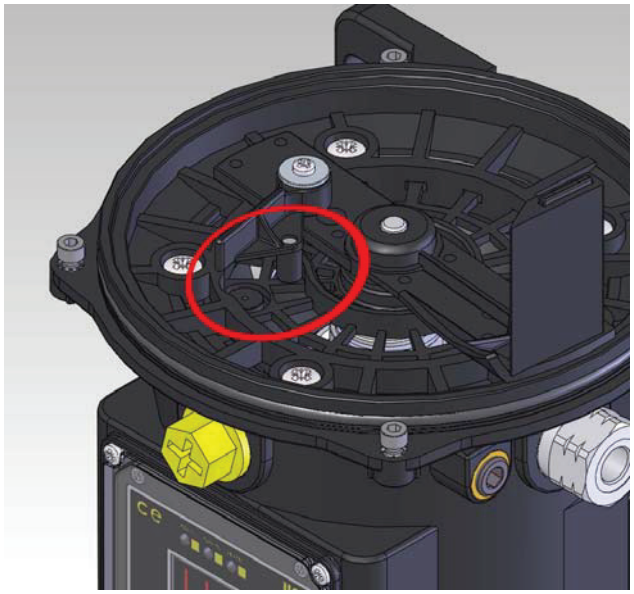

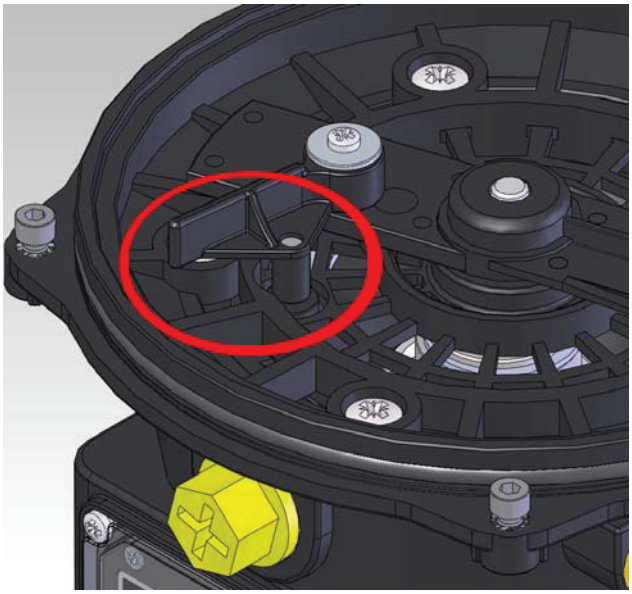

Low level switch sensor is integrated in the bottom of the reservoir. A floating magnet mounted on the paddle is kept in the small internal circumference when the reservoir is full and the spaddle rotates (Pic. 1).

When there's no grease the magnet rotates in the external circumference, passing on the low level sensor. A pulse (from close to open) is created at every revolution (Pic. 2).

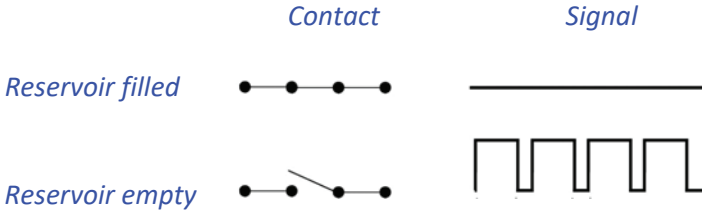

OIL LOW LEVEL SWITCH WITHOUT TIMER

Contact opens when lubricant is missing.

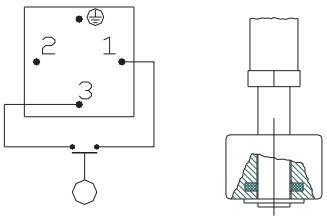

Pumping Element

Each pumping element feeds a primary progressive distributor via a single line. The modular distributor is comprised of three to twelve elements, each fabricated of carbon steel with tempered steel internal pistons.

Pos.	Description
1.	Working Inlet Section
2.	Mid-section 1- two potential dispensing elements
3.	Mid-section 2 - two potential dispensing elements
4.	End section - two potential dispensing elements
5.	Tie-rods - torque to 12 NM
6.	Cap screw
7.	Ferrule

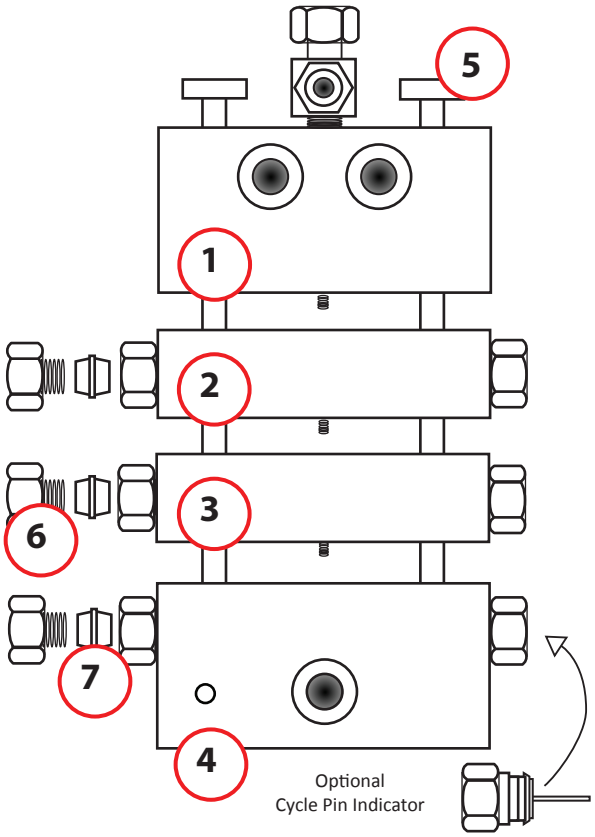

GREASE ZERKS

Are installed in the top of divider valves.

1. They aid in filling and purging of grease lines.

2. Help simplify troubleshooting

3. Provide a method of manually greasing the equipment should service be needed on the pump.

4. You should always clean before use

Best practices is to cover the zerk fittings with a dust cover.

Scan the QR code above to Watch our video on how to Single, or Twin a Divider Valve

120 Bosworth Street, West Springfield MA 01089
413-788-LUBE (5823)
www.lubetechnologies.com

Series Progressive System Typical Installation

NOTE: Not every grease system has primary and sec-ondary series progressive valves. The image below shows a typical series progressive system.

- Follow all torque specifications
- Mount divider valves in protected areas on the equipment
- Provide ample clearance around all hoses, electrical connections, and accessories

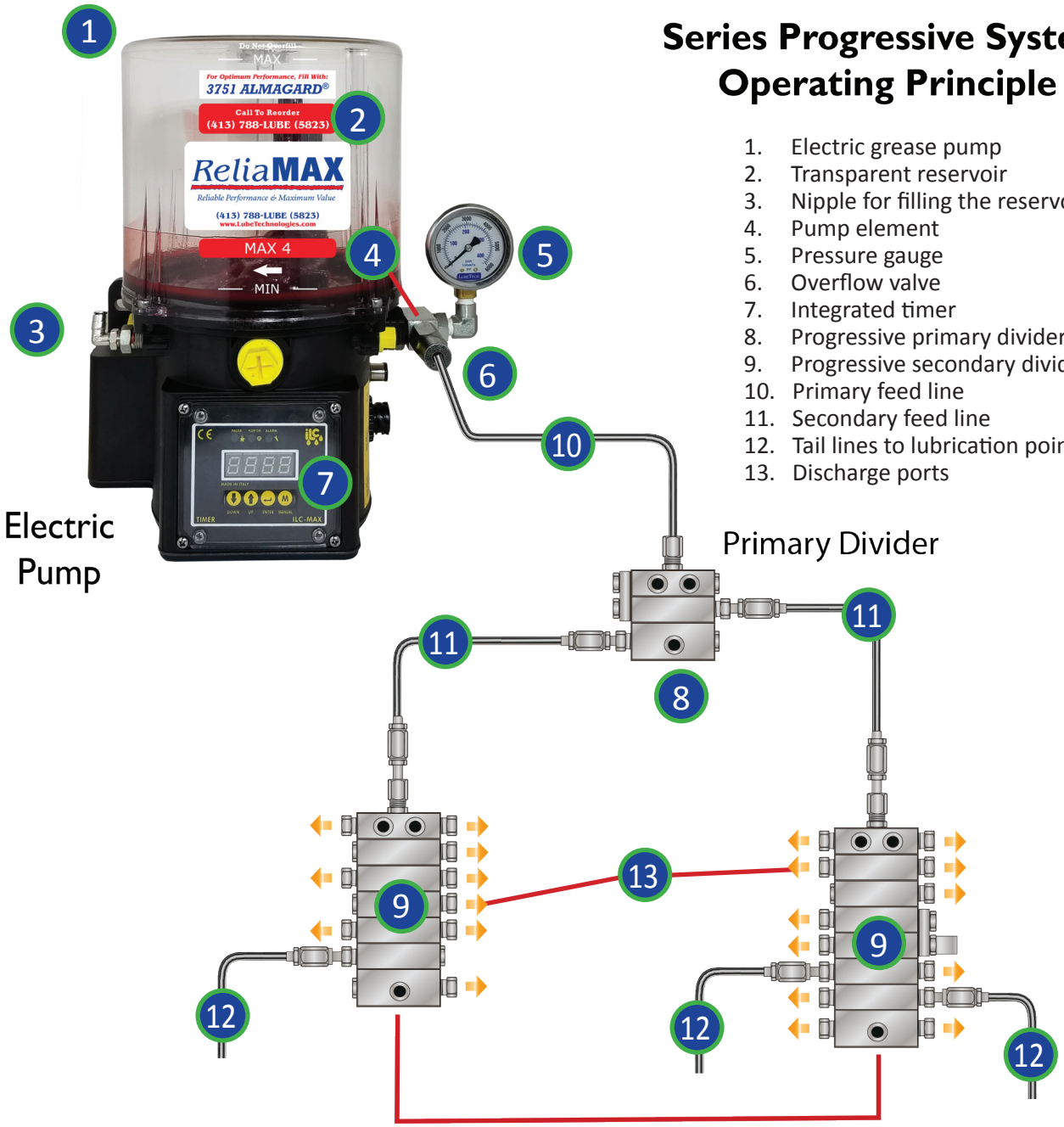

Series Progressive System Operating Principle

1. Electric grease pump
2. Transparent reservoir
3. Nipple for filling the reservoir
4. Pump element
5. Pressure gauge
6. Overflow valve
7. Integrated timer
8. Progressive primary divider
9. Progressive secondary divider
10. Primary feed line
11. Secondary feed line
12. Tail lines to lubrication points
13. Discharge ports

Filling and Testing

- An automatic lubrication system must be free of air in order to generate enough pressure to cycle grease through the valves.

- Take care to ensure dirt and/or debris do not get on the grease fitting or introduced into the system.

How to go about manually filling an *Relia***MAX** Max 4 automatic lubrication system with a Fritsche Hand Press:

The filling cylinder will be unscrewed and than a grease-filled cartridge introduced. A filling connection straight or a 90° filling connection is mounted on the underside of the filling pump and on the lubrication pump.

By pressing down the piston rod of the filling pump, the grease in the cartridge is pressed into the reservoir of the lubrication pump.

The piston rod is retracted and the empty cartridge is removed from the filling pump. This process is repeated until the desired grease quantity is refilled.

How to fill an automatic lubrication pump system using a 35 lb pail pump topper with cam lock assembly:

Our Grease Transfer Pump (GTP) was designed for fast, easy bulk filling of automatic lubrication systems as well as grease guns. This provides an economical solution for refilling of automatic lubrication systems as well as most standard grease guns from bulk pails, 35lb (5 gallon) containers, instead of purchasing more expensive grease cartridges. The sealed system also keeps grease free from contamination.

The GTP is ideal for refilling a range of manual and air powered grease guns via the 9mm filler / bleeder valve. The *Relia***MAX** Automatic Lubrication Systems, Max 2, Max 4, Max 8 and our MiniMax, using camlock adaptors, can be refilled from the GTP by transferring directly into the pump. A height adjustable lid and pump assembly offers compatibility with several different size grease pails up to 20kg. Our GTP is the best choice for high volume / low pressure grease transfer, especially in remote or on-the-job applications.

Connect chosen filling device to the *Relia***MAX** Pump fill port (a). Fill pump reservoir with grease to **"JUST BELOW" the "MAX"** line (b) on the front of the reservoir. ***DO NOT OVER FILL!***

To confirm distribution system function:

Connect a grease gun to the grease zerk (c) on each divider valve. Do not use on air operated pump. Be sure to clean zerk fittings. Apply grease and monitor divider valve cycle pin (d) located on the bottom right of each divider valve. Apply enough lubricant to actuate each valve's cycle pin 20-30 times.

This will verify proper operation of each divider valve. If a divider valve is unable to accept lubricant from a hand grease gun and the cycle pin will not move, refer to trouble shooting section located on page 56.

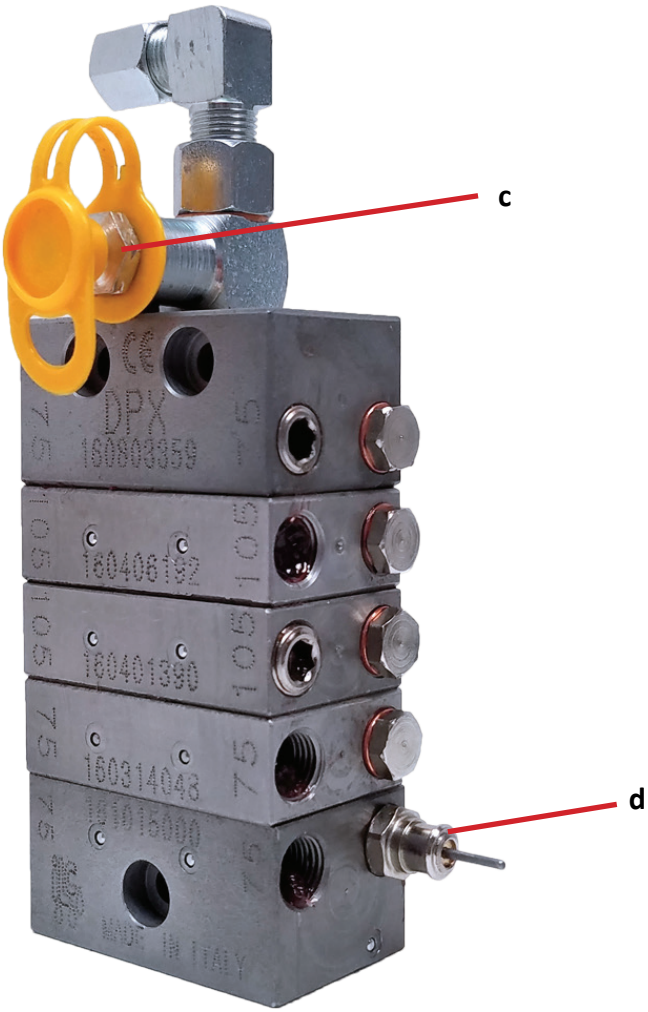

Scan the QR code above to Watch our video on Filling Options

ACCESSORIES

MANUAL PUMP AND ADAPTOR TO FILL ILC-MAX PUMPS

Unscrew yellow plug
Install filling connection
Insert cartridge inside the manual pump
Refill reservoir
Unscrew filling connection
Reinstall yellow plug

FILLING CONNECTION

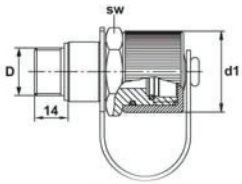

CODE	D	SW
ZZZ100-208	M22X1.5	32

FILLING PUMP

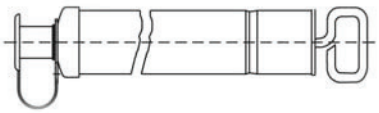

CODE TO ORDER		ZZZ100-201

How to Change the Reservoir

Do not attempt to change out the reservoir without removing the pump from the machine.

The pump must be inverted otherwise you will have a big grease mess on your hands.

1.) Disconnect the power lead

2.) Disconnect the discharge pipe fitting

3.) Remove the fasteners that affix the pump to the mounting bracket

4.) With the pump on a CLEAN work bench, remove the 3 Allen head fasteners that affix the plastic reservoir to the pump base

5.) Invert the pump so it is resting on the reservoir.

6.) Carefully break the seal and remove the reservoir

7.) It is better to place the lubricant that is in the reservoir back in the pail from which it came. If you scoop it out of the old reservoir and place it in the new one, you absolutely must insure no contamination enters the lubricant. In addition, by refilling the reservoir in an inverted position, lubricant will enter the vent.

8.) Grasp the paddle firmly and rotate clock wise to remove it from the drive shaft. Remove the paddle completely. (The Q-R Code below will take you to a video on how to properly replace a paddle)

9.) Install the paddle onto the drive shaft by turning it in a counter clockwise rotation. Special care needs to be taken to keep the wing sensor located on the outer edge of the paddle in its designated track. FAILURE TO ALIGN THE WING SENSOR COULD RESULT IN PUMP PADDLE OR RESERVOIR DAMAGE
(The Q-R Code below will take you to a video on how to properly replace a paddle)

10.) If the new reservoir being installed is empty, place it on the pump in its normal orientation. You must push the reservoir down to seal the reservoir lid so the mounting ears are flush and in the correct position for the Allen head screws.

11.) DO NOT USE THE SCREWS to draw down the reservoir onto the pump body as you risk breaking off the ears.

12.) Refill the pump as you normally would.

Scan the QR code above to Watch our video on Replacing Paddles

Fault Alarm Codes

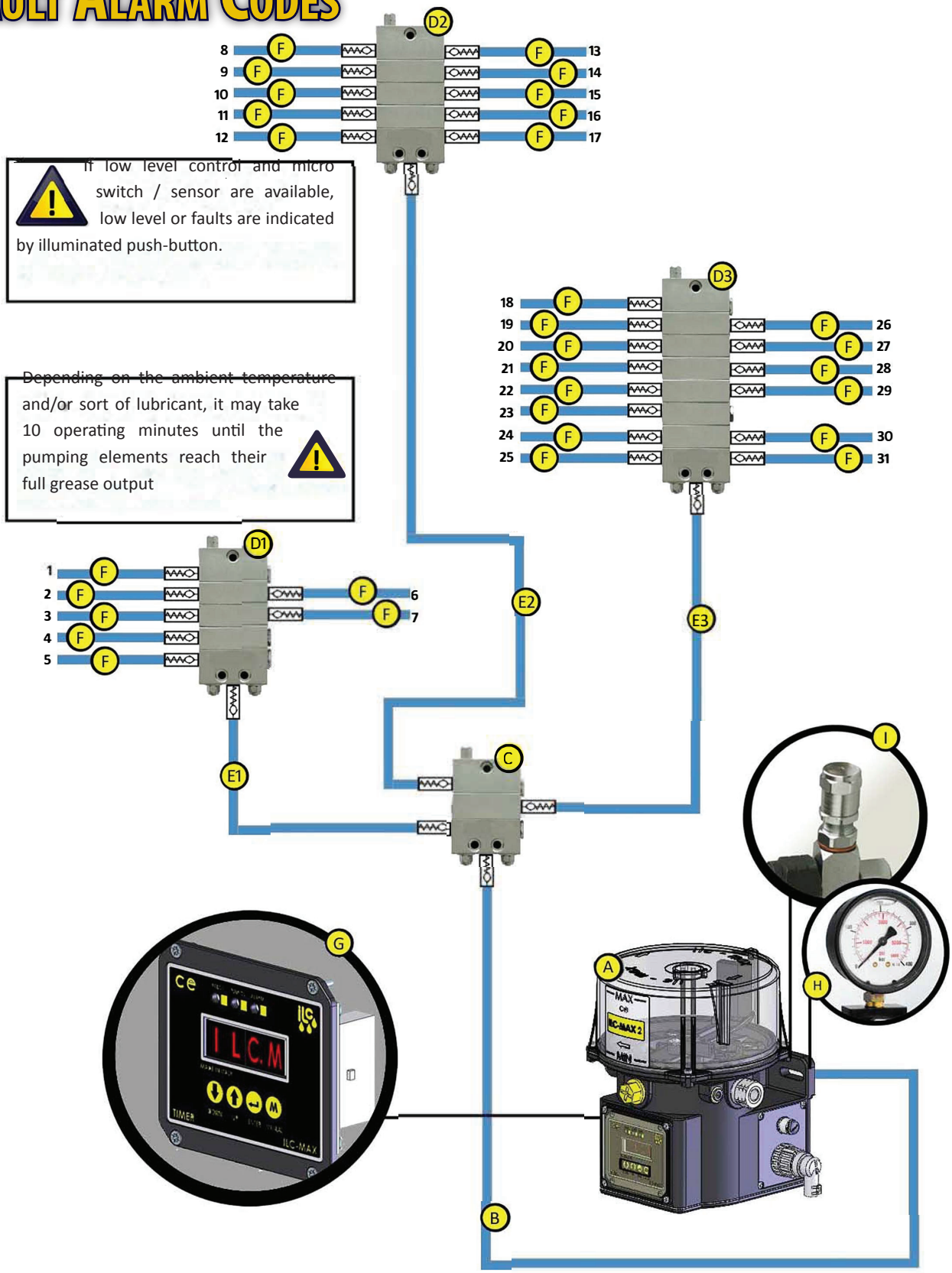

	RESET ALARM	
	PROBLEM Reset button is in short circuit (alarm let the pump working correctly)	REMEDY Change reset button
	CYCLE ALARM	
	PROBLEM Blockage of downstream progressive system	REMEDY See page 56
	OVERPRESSURE ALARM	
	PROBLEM Blockage of downstream progressive system	REMEDY See page 56
	LOW LEVEL ALARM	
	PROBLEM Reservoir is empty	REMEDY Fill the reservoir

	PUMP ROPES ALARM	
	PROBLEM Pump motor doesn't start	REMEDY See page 56
	TEMPERATURE ALARM	
	PROBLEM Timer is over 80°C	REMEDY Remove the heat source near to the timer (pump will work again when temperature will be under 70°C)
	TENSION ALARM	
	PROBLEM Timer is charged with a less than 9 Volts	REMEDY Check charging line and restore the correct voltage (min 9 V)
	STATUS DRIVER ALARM	
	PROBLEM Motor and timer are not communicating	REMEDY Change timer or motor

NOTES:

Pumping Element Replacement

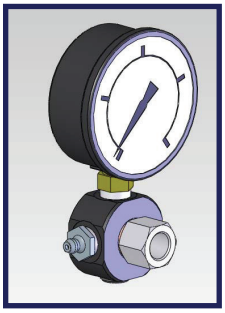

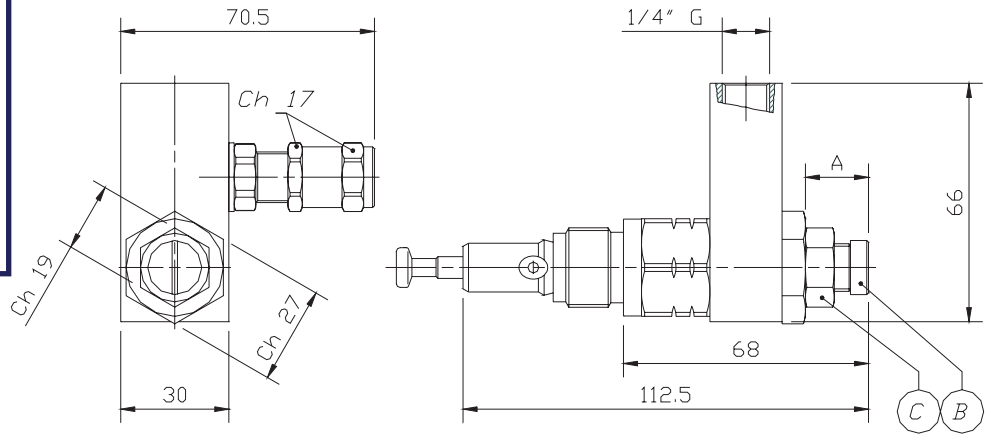

DISCHARGE ADJUSTMENT TABLE		
A	DISCHARGE/CYCLE	PERCENTAGE
23.6	0.16 CC	100 %
22.5	0.12 CC	75 %
21	0.08 CC	50 %
19.5	0.04 CC	25 %
18.5	0.01 CC	6 %
17.5	0.00 CC	0 %

The nominal delivery rate of the pumping element can be adjusted by loosening the locking nut (pos. c) and rotating the adjustment screw (pos. b) clockwise to reduce delivery, or counter clockwise to increase delivery of the lubricant. The output adjustment table describes the equivalent outputs that can be obtained by varying the distance (a) of the adjustment screw (pos. b).

IMPORTANT:
"A" MUST NOT TO BE MORE THAT 23.6MM

120 Bosworth Street, West Springfield MA 01089
413-788-LUBE (5823)
www.lubetechnologies.com

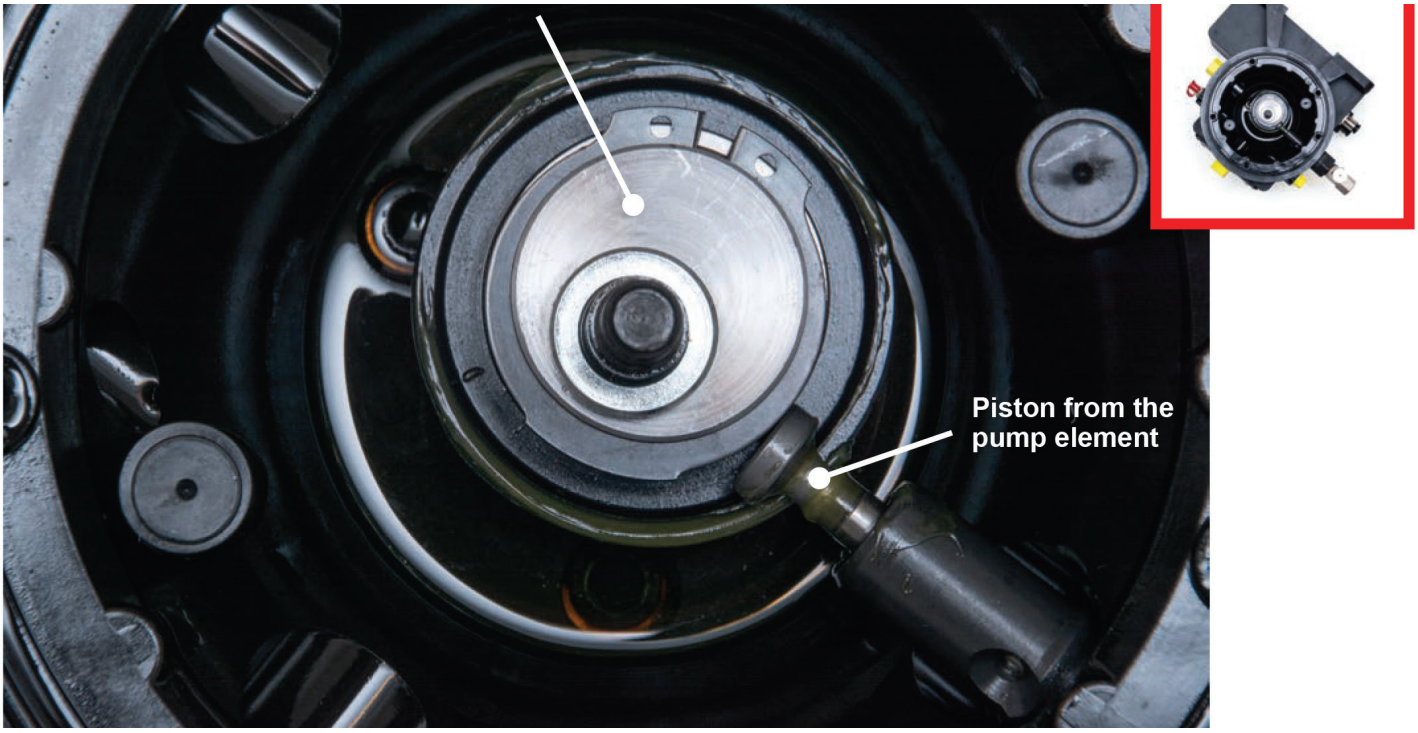

The *Relia***MAX** grease pump is driven by an electric motor. This can be a 12/24VDC or 115/230VAC electrical motor. An eccentric disc is mounted to this electric motor. The eccentric movement of this disk pushes the piston from the pump element back and forth. The electric motor is controlled by an internal or external control/timer.

PUMPING ELEMENT MAINTENANCE

In the event of anomalies or every 1000 hours, it is a good idea to check the condition of the pumping elements, as they are the heart of the greasing system. Servicing usually involves delivery valve seal which, in the event of wear or impurities, does not work properly and prevents lubricant from being dispensed normally or completely. (see chap. troubleshooting) The operations below can be done without removing the pumping element from the pump body. It is very important for everything to be done in a clean environment by qualified personnel.

26.1PUMPING ELEMENT FOR FIXED FLOW RATE METERING DEVICE

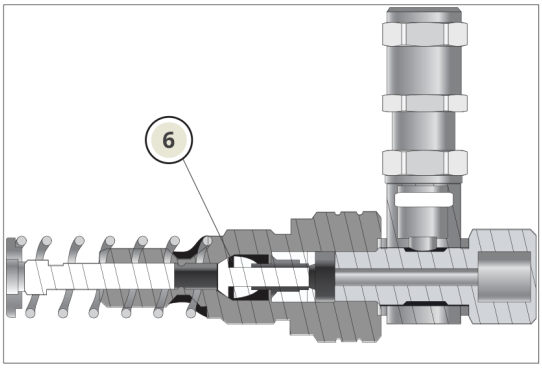

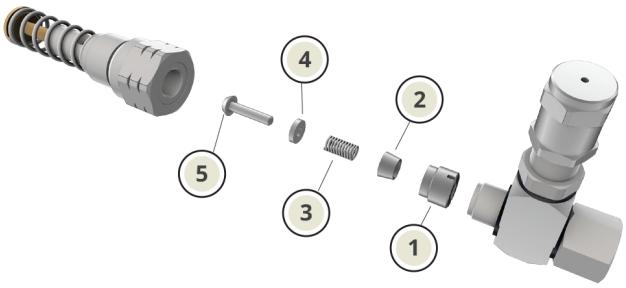

26.2 PUMPING ELEMENT FOR ADJUSTABLE FLOW RATE METERING DEVICE

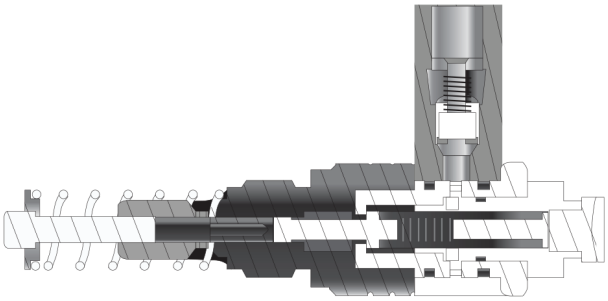

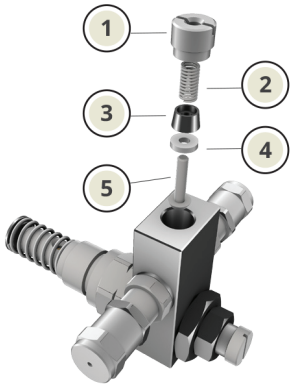

Remove the locking screw pos.01 and remove the unit made up by spring (2), spring holder (3), gasket (4) and piston (5) Thoroughly clean all the parts and the delivery valve seat (6) Attention: if you do not have a spare gasket (4), you can rotate it 180° and reassemble it

FIXED PUMPING ELEMENT
90.900.0

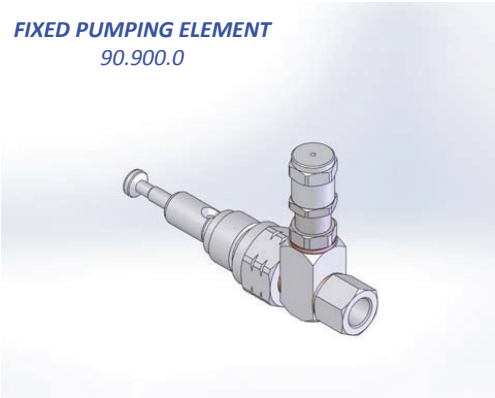

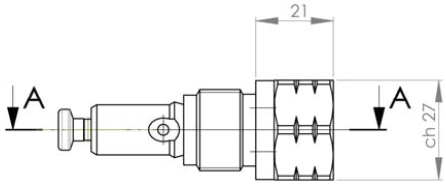

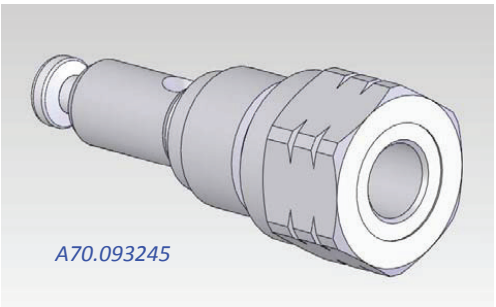

A70.093133 *To add an **external safety valve**, order:*

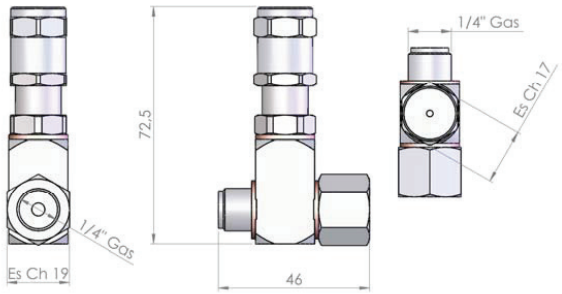

ADJUSTABLE PUMPING ELEMENT
90.900.3

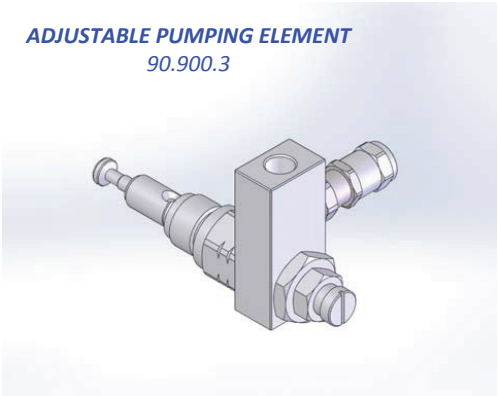

Pumping element has 2 adjunctive 1/4" G outlets that can be used to mount following accessories:

Safety valve / A68.075011
Pressure Gauge 0-400 / 46.600.0
Inductive sensor 250 Bar / 09.713.7
Electromechanical sensor 250 Bar / 09.713.7
Grease nipple / 39.000.3

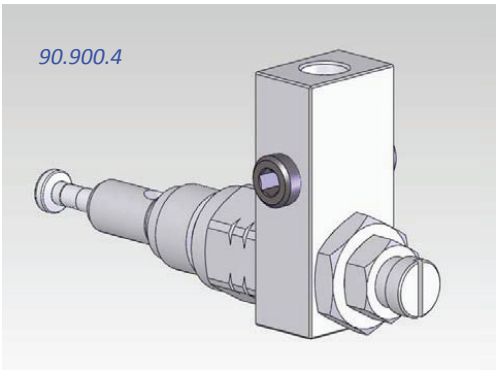

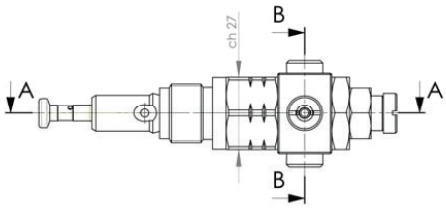

*To add an **external safety valve**, order:*

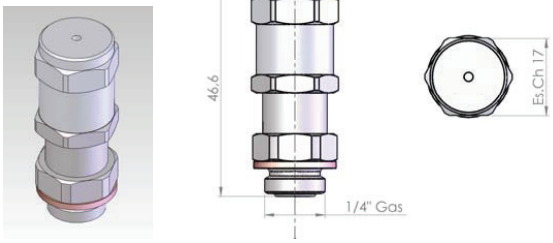

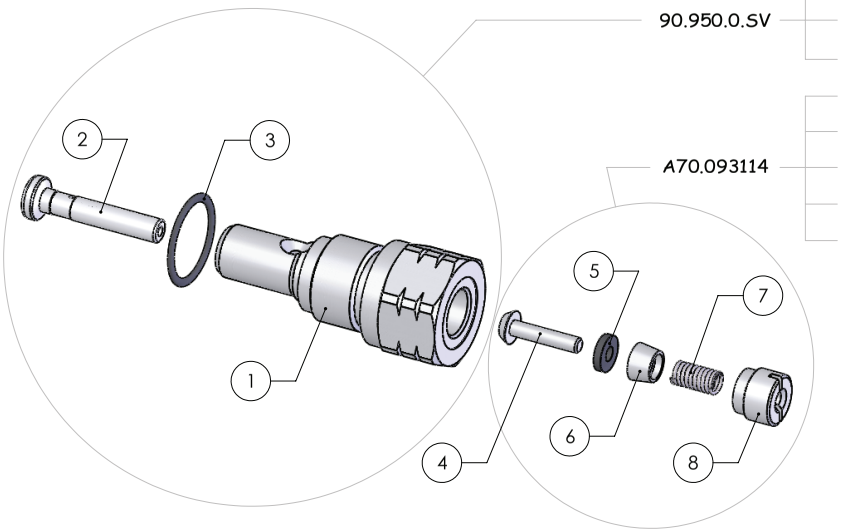

Pos.	Codice / code	Descrizione / Description	Q.ty
1	A51125028.N	Corpo pompante Body pumping element	1
2	A70093503	Pistone con by-pass interno 275bar Piston with internal by-bass 275bar	1
3	A92127137	O-Ring 2081	1
4	A51122018	Pistoncino per valvola di mandata Piston	1
5	A77130048	Guarnizione di tenuta per pistoncino pompante Gasket	1
6	A51088039	Guidamolla per valvola di mandata Spring guide	1
7	A86126085	Molla cilindrica a compressione per valvola di mandata Spring	1
8	A51096021	Tappo per valvola di mandata pompante Plug for check valve	1

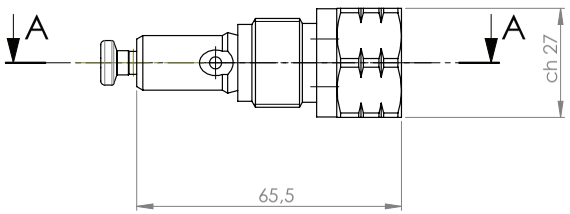

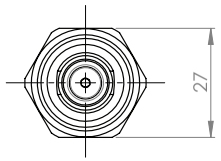

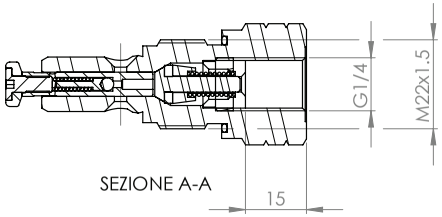

SEZIONE A-A

Ver. 3/18 51

CLIENTE / CLIENT: ilc s.r.l.	DATA /DATE: 28/06/11	QUESTO DISEGNO E' DI PROPRIETA' ESCLUSIVA DELLA -ILC- IMPIANTI DI LUBRIFICAZIONE CENTALIZZATA S.R.L. A TERMINI DI LEGGE ESSA VIETA DI RIPRODURLO O COMUNICARLO A DITTE CONCORRENTI O AD ALTRI SENZA LA SUA ESPLICITA AUTORIZZAZIONE
SISTEMA / SYSTEM: Progressivo	DISEGNATO / DRAWN: BARONI	
LUBRIFICANTE / LUBRICANT: olio da 32cSt fino grassi NLGI 2	CONTROLLATO / CHECK: -	UFFICIO TECNICO GORLA MINORE
PUNTI / POINT: 1 — CODICE CLIENTE /CLIENT CODE	SCALA / SCALE: 1:1	
DENOMINAZIONE / DESCRIPTION: Gruppo pompante fisso ILC-MAX con by-pass 275bar Fixed pumping element ILC-MAX with by-pass 275bar	CODICE N° / CODE: 90-950-0	FOGLIO/SHEET

A3 DISEGNO CAD

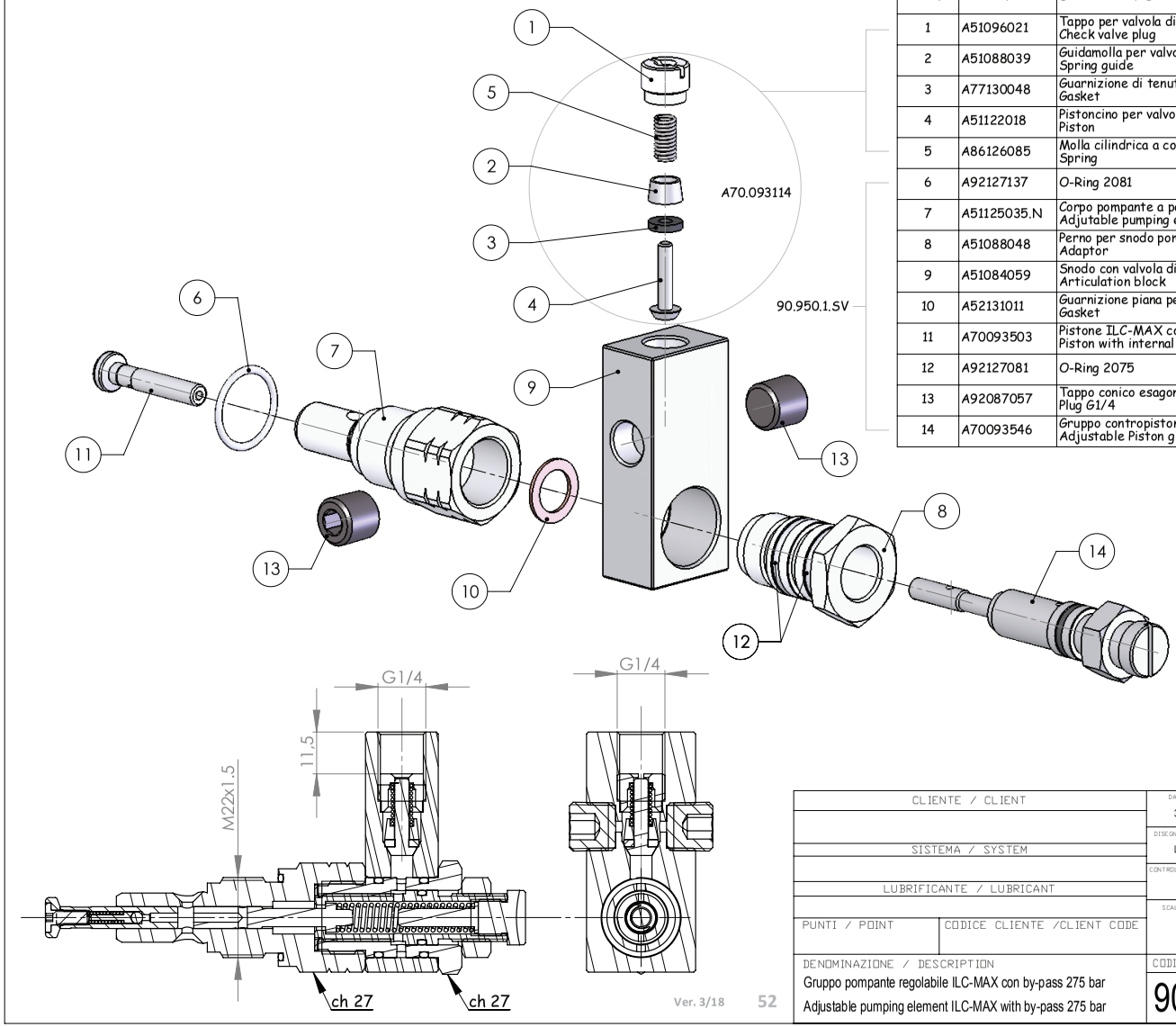

Pos.	Codice / Code	Descrizione / Description	Q.ty
1	A51096021	Tappo per valvola di mandata pompante Check valve plug	1
2	A51088039	Guidamolla per valvola di mandata elettropompa Spring guide	1
3	A77130048	Guarnizione di tenuta per pistoncino pompante Gasket	1
4	A51122018	Pistoncino per valvola di mandata Piston	1
5	A86126085	Molla cilindrica a compressione per valvola di mandata Spring	1
6	A92127137	O-Ring 2081	1
7	A51125035.N	Corpo pompante a portata regolabile Adjutable pumping element body	1
8	A51088048	Perno per snodo pompante regolabile Adaptor	1
9	A51084059	Snodo con valvola di mandata per pompante regolabile Articulation block	1
10	A52131011	Guarnizione piana per pompante regolabile Gasket	1
11	A70093503	Pistone ILC-MAX con by-pass interno 275bar Piston with internal by-pass 275bar	1
12	A92127081	O-Ring 2075	2
13	A92087057	Tappo conico esagono incassato 1/4"GasMk Plug G1/4	2
14	A70093546	Gruppo contropistone pompante regolabile Adjustable Piston group	1

Ver. 3/18 52

CLIENTE / CLIENT	DATA /DATE 30/10/06	QUESTO DISEGNO E' DI PROPRIETA' ESCLUSIVA DELLA -ILC- IMPIANTI DI LUBRIFICAZIONE CENTALIZZATA S.R.L. A TERMINI DI LEGGE ESSA VIETA DI RIPRODURLO O COMUNICARLO A DITTE CONCORRENTI O AD ALTRI SENZA LA SUA ESPLICITA AUTORIZZAZIONE
SISTEMA / SYSTEM	DISEGNATO / DRAWN Lamperti	
LUBRIFICANTE / LUBRICANT	CONTROLLATO / CHECK -	UFFICIO TECNICO GORLA MINORE
PUNTI / POINT — CODICE CLIENTE /CLIENT CODE	SCALA / SCALE 1:1	
DENOMINAZIONE / DESCRIPTION Gruppo pompante regolabile ILC-MAX con by-pass 275 bar Adjustable pumping element ILC-MAX with by-pass 275 bar	CODICE N° / CODE 90-950-1	ISSUE/REVISE

DISEGNO CAD

A3

Parts and Supply List

Q.	Article Number	Description	Photo
	40.2.12DC.FCT.G	PUMP 2 KG 12 V DC + TIMER +	
		PUMPING ELEMENT + SAFETY VALVE	
	40.2.24DC.FCT.G	PUMP 2 KG 24 V DC + TIMER +	
		PUMPING ELEMENT + SAFETY VALVE	
	40.2.115.FCT.G	110 VAC	
	40.4.12DC.FCT.G	PUMP 4 KG 12 V DC + TIMER +	
		PUMPING ELEMENT + SAFETY VALVE	
	40.4.24DC.FCT.G	PUMP 4 KG 24 V DC + TIMER +	
		PUMPING ELEMENT + SAFETY VALVE	
	40.4.115.FCT.G	110 VAC	
	40.4.12DC.FST.G	PUMP 4 KG 12 V DC - NO TIMER +	
		PUMPING ELEMENT + SAFETY VALVE	
	40.4.24DC.FST.G	PUMP 4 KG 24 V DC - NO TIMER +	
		PUMPING ELEMENT + SAFETY VALVE	
	40.8.12DC.FCT.G	PUMP 8 KG 12 V DC + TIMER +	
		PUMPING ELEMENT + SAFETY VALVE	
	40.8.24DC.FCT.G	PUMP 8 KG 24 V DC + TIMER +	
		PUMPING ELEMENT + SAFETY VALVE	
	40.8.115.FCT.G	110 VAC	
	40.8.12DC.FST.G	PUMP 8 KG 12 V DC - NO TIMER +	
		PUMPING ELEMENT + SAFETY VALVE	
	40.8.24DC.FST.G	PUMP 8 KG 24 V DC - NO TIMER +	
		PUMPING ELEMENT + SAFETY VALVE	
	40.BCT.BT.DC	EXTERNAL CONTROL	

	100-201	FILLING PUMP	
	100-200	FILLING CONNECTION	
	46.750.0	BLOCK WITH PRESSURE GAUGE, SAFETY VALVE	
		AND GREASE NIPPLE FOR FIXED PUMPING ELEMENT	
		THIS BLOCK IS MOUNTED DIRECTLY ON THE	
		FIXED PUMPING ELEMENT	
	106-104-NPT	ELBOW SCREW FITTING 90°	
	106-004-NPT	STRAIGHT SCREW FITTING	
	UNI5931	M5x35 Bolt	
	B 4205 M5	5/16 Flat Washer	
	B 1205 Nut	5/16 Lock Nut	
	M5x.8	Tap	
	2.1N.03	DPX-3 (6 OUTLETS)	
	2.1N.04	DPX-4 (8 OUTLETS)	
	2.1N.05	DPX-5 (10 OUTLETS)	
	2.1N.06	DPX-6 (12 OUTLETS)	
	2.1N.07	DPX-7 (14 OUTLETS)	
	2.1N.08	DPX-8 (16 OUTLETS)	
	2.1N.09	DPX-9 (18 OUTLETS)	
	2.1N.10	DPX-10 (20 OUTLETS)	
	2.1N.11	DPX-11 (22 OUTLETS)	
	2.1N.12	DPX-12 (24 OUTLETS)	

	09.600.3	BRIDGE WITHOUT OUTLET	
	09.600.4	BRIDGE WITH OUTLET	
	A73.087010	PLUG FOR DPX OUTLET	
	A92.127006	"O" RING FOR PLUG	
	14.050.3	CHECK VALVE 1/8" DPX INLET	
	14.050.8	CHECK VALVE 10x1 DPX OUTLET	
	106-001	STRAIGHT MALE CONNECTOR Ø 6 M6	
	106-002	STRAIGHT MALE CONNECTOR Ø 6 M8X1	
	106-003	STRAIGHT MALE CONNECTOR Ø 6 M10X1	
	106-004	STRAIGHT MALE CONNECTOR Ø 1/8" BSP X1	
	106-004	STRAIGHT MALE CONNECTOR Ø 6 R 1/8"	
	108.003	STRAIGHT MALE CONNECTOR Ø 8 R 1/8"	
		STRAIGHT MALE CONNECTOR Ø 8 R 1/4"	
	106-101	ELBOW MALE CONNECTOR Ø 6 M6	
	106-102	ELBOW MALE CONNECTOR Ø 6 M8X1	
	106-104-NPT	ELBOW MALE CONNECTOR Ø M10X1	
	106-104	ELBOW MALE CONNECTOR Ø 6 R 1/8"	
	1010-005	ELBOW MALE CONNECTOR Ø 6 R 1/4"	
	503-104	Swivel Fitting 1/8" NPT	
	100-821	45° ADAPTER M8X1 (M) - M8x1 (F)	
	100-833	45° ADAPTER M10X1 (M) - M10x1 (F)	
	100-844	45° ADAPTER R 1/8" (M) - R 1/8" (F)	

	27718	90° ADAPTER 1/4"-28 (M) 1/8" NPT (F)	
	100-721	90° ADAPTER M6X1 (M)-M8X1 (F)	
	100-722	90° ADAPTER M8X1 (M)-M8X1 (F)	
	100-733	90° ADAPTER M10X1 (M)-M10X1 (F)	
	100-744	90° ADAPTER R 1/8" BSP (M)-R 1/8" BSP (F)	
	100-711	90° ADAPTER R 1/8" BSP (M)-M8x1 (F)	
	100-137	EXTENSION PIECES M8X1 (M) - M10X1 (F) - 23	
	100-142	EXTENSION PIECES M10X1 (M) - M10X1 (F) - 18	
	100-141	EXTENSION PIECES M10X1 (M) - M10X1 (F) - 23	
	100-145	EXTENSION PIECES M10X1 (M) - M10X1 (F) - 35	
	100-146	EXTENSION PIECES M10X1 (M) - M10X1 (F) - 50	
	100-151	EXTENSION PIECES R 1/8" (M) - M10X1 (F) - 18	
	100-009-25M	6MM POLYAMIDE PLASTIC TUBE	
	100-002-50M	HIGH PRESSURE HOSE 4.0X8.6 EMPTY	
	100-001-50M	HIGH PRESSURE HOSE 4.0X8.6 FULL NLGI 2	
	100-050	SLEEVE FOR HOSE 4.1X8.75	
	100-054	STRAIGHT TUBE STUD 6X20	
	100-051	STRAIGHT TUBE STUD 6X30	
	100-058	45° TUBE STUD 6X35	

	100-052	90° TUBE STUD 6X21 (21)	
	100-053	90° TUBE STUD 6X37 (36)	
	100-056	90° TUBE STUD 6X53 (47)	
	30.331.0	HIGH PRESSURE HOSE 6.4X12 EMPTY	
		DOUBLE SHUT-OFF QUICK COUPLING	
	HFH2-62	FEMALE 1/4"	
	HFH2-63	MALE 1/4"	
	HFH2-67M	DUST CAP	
	5404-08-04	1/2" MALE - 1/4" MALE	
	90.900.0	FIXED PUMPING ELEMENT	
	90.900.3	ADJUSTABLE PUMPING ELEMENT	
	21046C	SMALL TIES	
	21047	LARGE TIES	
	25604	CLIPS HOSE D4	
	25606	CLIPS HOSE D6	
	25608	CLIPS HOSE D8	
	25610	CLIPS HOSE D10	
	25612	CLIPS HOSE D12	
	25614	CLIPS HOSE D14	
	25616	CLIPS HOSE D16	
	25618	CLIPS HOSE D18	
	25620	CLIPS HOSE D20	

	08.111.0	WELDING PROTECTION	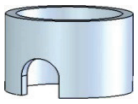
	ZZZ00208210	METALLIC PROTECTION 6M	
	A92.078422	GREASE NIPPLE 1/8G	
	A70.078440	GREASE NIPPLE M10x1	
	UNI5931-M5X40	BLOCK SCREW	
	B4205	BLOCK WASHER D5 ZINC.	
	B1205	BLOCK NUT M5 H3.2 ZINC.	
	08.112.0	"Z" MOUNTING PLATE FOR DPA	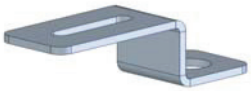
	08.113.0.03	WELDING MOUNTING PLATE FOR DPA-3	
		IN CASE OF WELDING MOUNTING PLATE	
		YOU DO NOT NEED ANY WASHER OR NUT!	
		TO SCREW THE PROGRESSIVE DIVIDERS FIXING	
		SCREWS AND PUMP FIXING SCREWS WE	
		RECOMMEND TO USE *LOXEAL 55.03* ADHESIVE!!	

	03.355.5	BANJO 1/8"G + GREASE NIPPLE	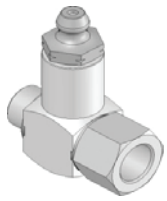
	40.CBL.3.05	5 M WIRES 3 POLES	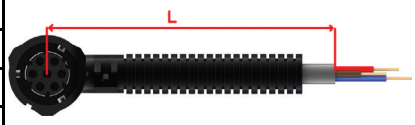 L
	40.CBL.3.10	10 M WIRES 3 POLES	
	40.CBL.3.15	15 M WIRES 3 POLES	
	40.CBL.7.05	5 M WIRES 7 POLES	
	40.CBL.7.10	10 M WIRES 7 POLES	
	40.CBL.7.15	15 M WIRES 7 POLES	
		FUSE 15 AMP	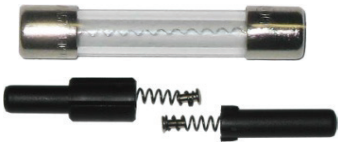
		FUSE 7,5 AMP	
		PLASTIC CONTAINER FOR FUSE	
	08.113.0.03	Weld on Block Mount	

NOTES:

Calculate the Return on Your Investment

An ReliaMAX Automatic Lubrication System Can Pay for Itself in Less than a Year!

Annual Costs to Manually Lubricate

Labor	Typical	Enter Your Own Numbers
30 minutes per 8 hour shift X $35 hour X 250 days	$4,375.00	
Lost Production		
30 minutes per 8 hour shift X $100 hour X 250 days	$12,500.00	
TOTAL Manual Lubrication Cost	**$16,875.00**	

Costs to Repair Failed Components

Replacement Pins and Bushings		Enter Your Own Numbers
2 Pins X $500.00 each	$1,000.00	
Repair Labor		
One Person X $80/hour X 2 Repairs X 6 hours each	$960.00	
Lost Production		
2 Repairs X 6 hours each X $100/hour (Repair Cost)	$1,200.00	
TOTAL Repair Cost	**$3,160.00**	

Annual manual lubrication cost including cost to repair failed pins & bushings

$15,625.00 + $3,160.00 =	**$20,035.00**	

Enhanced Employee Safety

What is the Value to Your Company?	**$$$???**	

ROI

Labor & Lost Production via Manual Lubrication	*$20,035.00*	
Estimated cost of an ReliaMAX Centralized Lube System Installed	$8,500.00	
TOTAL ANNUAL SAVINGS	$11,535.00	
TOTAL ANNUAL SAVINGS Due to Safely Greasing Equipment ...	$$$$?????	

System cost and return on investment
Typical installed ReliaMAX System cost for a Loader

5-8 months ROI!

Return on investment

$8,500/$11,535 x 12 months = 8.8 months

System cost will vary based on options, local labor costs and location of installation.

*All numbers are rounded off and based on customer estimates. Your particular cost savings may vary.

NOTE: This is first year savings. If the machine is kept for 10 years, the annual cost to lubricate it is $850.00 in this example.

120 Bosworth Street, West Springfield MA 01089
413-788-LUBE (5823)
www.lubetechnologies.com

Warranty

Lubrication Technologies, Inc. will warrant the lubrication system components for a period of two years from the date of sale or installation by Lubrication Technologies, Inc. against defects in materials and workmanship. Lubrication Technologies, Inc. warrants the installation (if applicable) for one year from date of the installation performed by Lubrication Technologies Inc. If components and/or the installation prove to be defective during this warranty period, it will be repaired, altered, or replaced without charge. In the event of a warranty claim, Purchaser must immediately notify Lubrication Technologies Inc, in writing, of system, component, installation, or performance defects. Lubrication Technologies, Inc. will make every effort to address warranty issues in a timely fashion. In no event shall Lubrication Technologies, Inc. be liable for incidental or consequential damages, lost production or downtime costs.

These warranties do not apply to the machine or any of the components lubricated by the system it is installed upon, or any other equipment or accessories, any installation labor or performance defects thereupon or damage from accident, overload, abuse, misuse, use of non-approved lubricants, negligence, abrasive or corrosive materials, or to equipment repaired or altered by anyone not authorized by Lubrication Technologies, Inc. to repair or alter the equipment.