lubrication systems

ReliaMAX™

Reliable Performance & Maximum Value

DR-DF

Dual-line metering valve system

Designed to work all the day, every day
in extreme condition and difficult environments

CONTENTS

LUBRICATION Technologies, Inc.
(413) 788-LUBE (5823)
www.LubeTechnologies.com

Descrizione generale

Dual-line lubrication systems are designed to be used on large industrial structures, facilities and systems.

DF and DR modular valves specifically designed for dual-line lubrication systems, up to 400 bar pressures. They are available with up to 8 outlets. They have many benefits over traditional monoblock dividers. DF-DR are Zi-Ni plated.

A mix of double and single discharge modules can be fitted to each base. Every module is available in two different flow rates.

DF valves come with fixed discharge and DR valves with adjustable discharge. These modules are fitted to bases which are fitted and piped to the centralized lubrication syste.

Steplessly adjustable module lubricant discharge

Reduced failing components maintenance cost

Visual indicator for system control

Modular design to adapt to any system needing

Closing plates for future system expansion

Always supplied complete with standard 'O' rings and fixing screws

Data sheet

Max pressure	400 bar
Operating temperature	from -30 °C to +80 °C
Lubricants	Min 100 cSt 40 °C Max NLGI 2 at operating temperature
Cycle/minute	100
Main line connection inlet	3/8" bsp o nptf
Outlet line connection inlet	1/4" bsp o nptf
Material body	Carbon steel SS.316-L

Outlet discharge/cycle

DF-1	DF-3	DR-3	DR-5
1 cc fixed	3 cc fixed	0.15 ÷3 cc adjustable	0.5 ÷ 24 cc adjustable

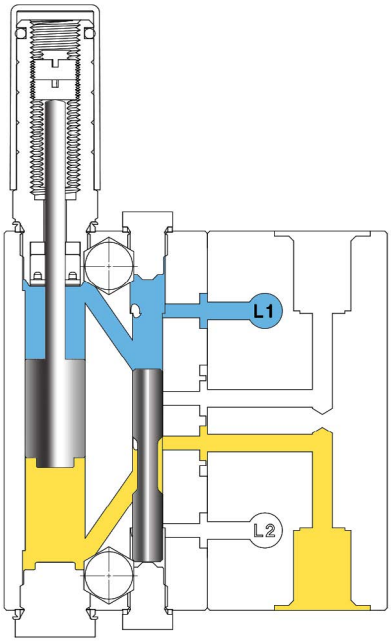

A

Lubricant from the pump discharge in L1, pressurized lubricant enters inlet at top right - pushing inlet piston down uncovering both diagonal passages and pressurising the upper diagonal passage and the chanber above Discharge piston. Discharge piston begins to move down.

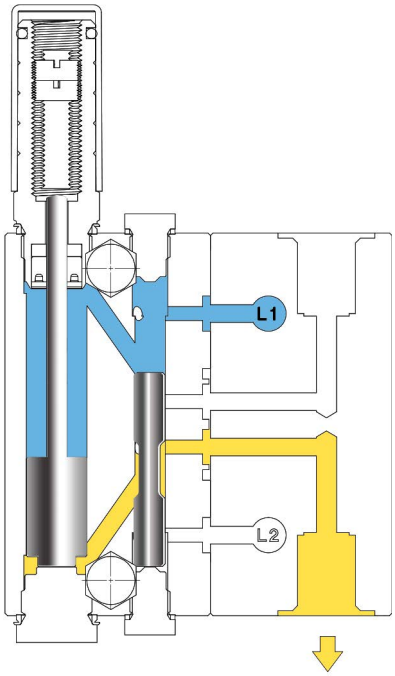

B

The pressurized lubricant forces the Discharge piston to the end of its stroke, and the full measured charge is delivered to the bearing. Further application of pressure on the upper supply line will have no effect.

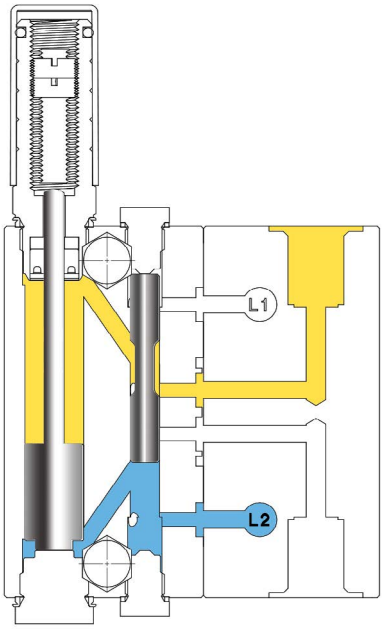

C

When the flow directing valve at the pump is changed over and the pressurised lubricant enters inlet at the bottom right - pushing inlet piston up uncovering both diagonal passages and pressurising the lower diagonal passage and the chamber below Discharge piston. Discharge piston begins to move up.

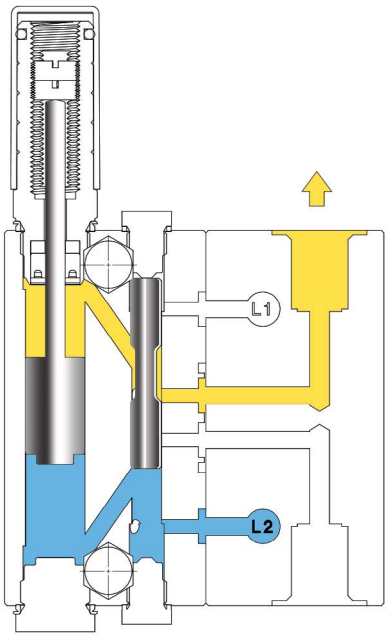

D

The pressurised lubricant from the lower port forces the Discharge piston to the end of its stroke and the full measured charge is delivered to the bearing. Further application of pressure on the lower supply line will have no effect.

Discharge asjustment

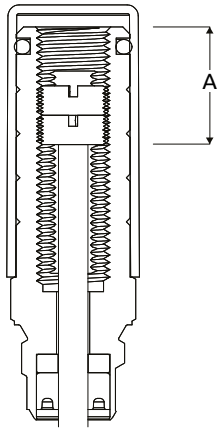

Every valve is equipped with a visual indicator for lubricant discharge asjustment.

The valve discharge can be adjusted on site to suit the application needings or preliminary specified by ILC during design phase.

Lubricant discharge percentage is directly displayed by the visual pin position (A).

Single and double discharge outlet conversion

Valve are supplied by standard with double outlet discharge. To convert to single outlet discharge unscrew the two fastening screws that secure the metering device to the base. Remove then the two "O" ring inside and reassemble the valve on the base.

Important
Order the unused discharge closing cap seperately (**cod. TW.107602**)

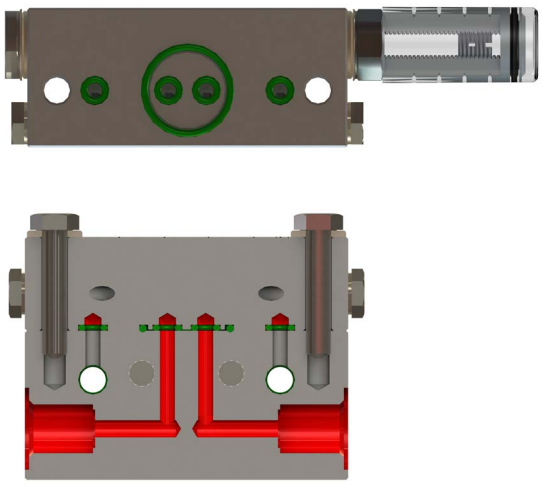

double discharge

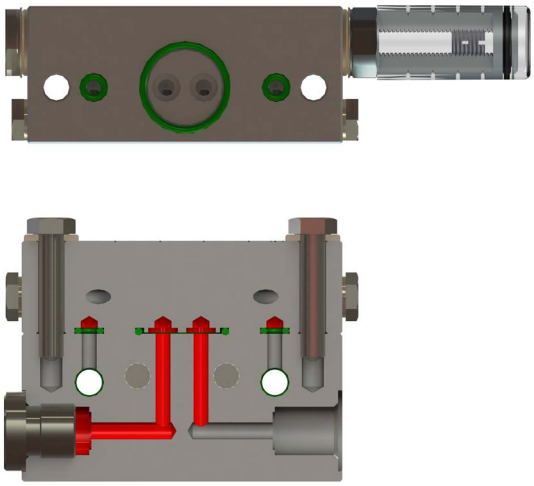

single discharge

Assembled block with different modules

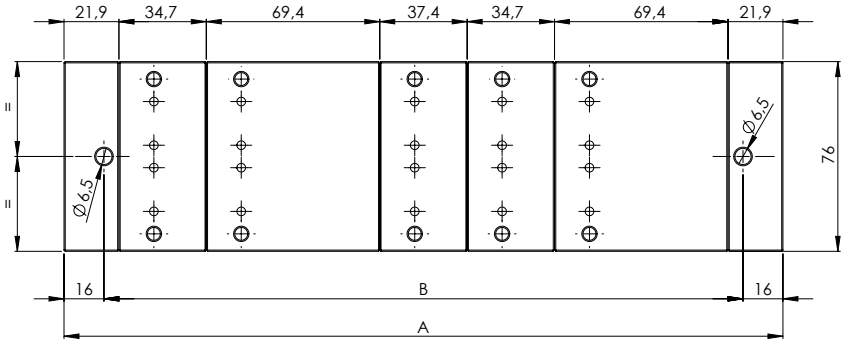

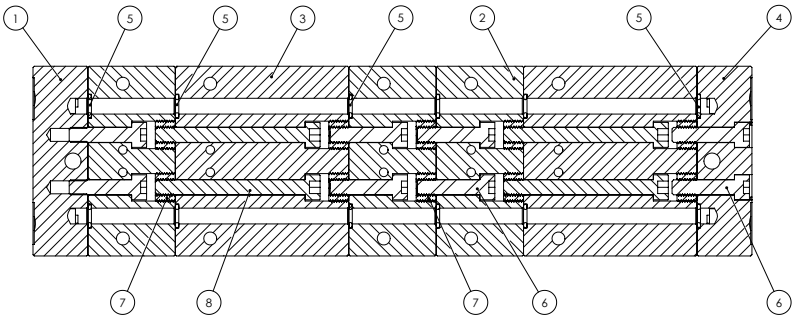

The two different bases grant an array of different configurations.

In the picture an example of an assembled block made with different module size.

We can get A and B size from single modules size.

A	B
286,7 mm	254,7 mm

Base DR/DF-3	Base DR-5
34,7 mm	69,4 mm

DR-3/DF-3 model

Valves	A	B
1	78,5 mm	46,5 mm
2	113,2 mm	81,2 mm
3	147,9 mm	115,9 mm
4	182,6 mm	150,6 mm

DR-5 Model

Valves	A	B
1	78,5 mm	46,5 mm
2	113,2 mm	81,2 mm
3	147,9 mm	115,9 mm
4	182,6 mm	150,6 mm

Pos.	Cod. BSP Thread	Cod. NTPF Thread	Description
1	5N.BB.A.BSP	5N.BB.A.NPTF	3/8" Initial base
2	5N.BB.B.BSP	5N.BB.B.NPTF	DR-3 valve base
3	5N.G.BB.B.BSP	5N.G.BB.B. NPTF	DR-5 1/4" valve base
4	5N.BB.C.BS	5N.BB.C.NPTF	3/8" final base
5	A92.127195		"O"ring 106 Viton
6	UNI5931-M6X25		TCE M6X25 UNI 5931 Screw
7	A51087083		M12X1 Threaded bushes
8	UNI5931-M6X60		TCE M6x60 UNI 5931 Screw

Standard

Fixed discharge

Line	Discharge	Steel	SS316.L
DF1	1 cc	5N.F1.BD	5X.F1.BD
DF3	3 cc	5N.F3.BD	5X.F3.BD

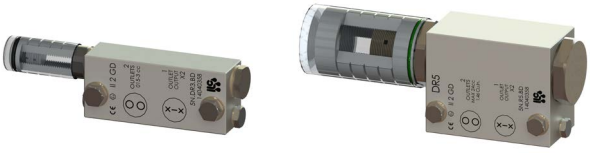

Adjustable discharge

Line	Discharge	Steel	SS316.L
DR3	0,15 - 3 cc	5N.R3.BD	5X.R3.BD
DR5	0,5 - 24 cc	5N.R5.BD	5X.R5.BD

With cycle control

Fixed discharge

Line	Discharge	Steel	SS316.L
DF1	1 cc	5N.F1.BD.ICS	5X.F1.BD.ICS
DF3	3 cc	5N.F3.BD.ICS	5X.F3.BD.ICS

Adjustable discharge

Line	Discharge	Steel	SS316.L
DR3	0,15 - 3 cc	5N.R3.BD.ICS	5X.R3.BD.ICS
DR5	0,5 - 24 cc	5N.R5.BD.ICS	5X.R5.BD.ICS

Single control element codes

DF1/3-DR3	5N.ICS.03
DR5	5N.ICS.05

Fixed or adjustable discharge valves can be equipped with a inductive sensor (M12 x 1) for cycle control.

This solution is applied where is necessary to monitor DI-scarge piston real movement.

The element can be ordered already equipped with control or expanded later removing the closing cap.

Closing plates

Closing plates can be installed in view of additional elements being added or unused points BSP-NPTF being removed.

Steel	SS316.L
5N.PC.SB	5X.PC.SB

DF-1

Fixed discharge 1 cc

Steel		SS316.L				
BSP	NTPF	BSP	NTPF	Outlets	A	B
5N.DF1.01.BSP	5N.DF1.01.NPTF	5X.DF1.01.BSP	5X.DF1.01.NPTF	2	78.5	46.5
5N.DF1.02.BSP	5N.DF1.02.NPTF	5X.DF1.02.BSP	5X.DF1.02.NPTF	4	113.2	81.2
5N.DF1.03.BSP	5N.DF1.03.NPTF	5X.DF1.03.BSP	5X.DF1.03.NPTF	6	147.9	115.9
5N.DF1.04.BSP	5N.DF1.04.NPTF	5X.DF1.04.BSP	5X.DF1.04.NPTF	8	182.6	150.6

DF-3

Fixed discharge 3 cc

Steel		SS316.L				
BSP	NTPF	BSP	NTPF	Outlets	A	B
5N.DF3.01.BSP	5N.DF3.01.NPTF	5X.DF3.01.BSP	5X.DF3.01.NPTF	2	78.5	46.5
5N.DF3.02.BSP	5N.DF3.02.NPTF	5X.DF3.02.BSP	5X.DF3.02.NPTF	4	113.2	81.2
5N.DF3.03.BSP	5N.DF3.03.NPTF	5X.DF3.03.BSP	5X.DF3.03.NPTF	6	147.9	115.9
5N.DF3.04.BSP	5N.DF3.04.NPTF	5X.DF3.04.BSP	5X.DF3.04.NPTF	8	182.6	150.6

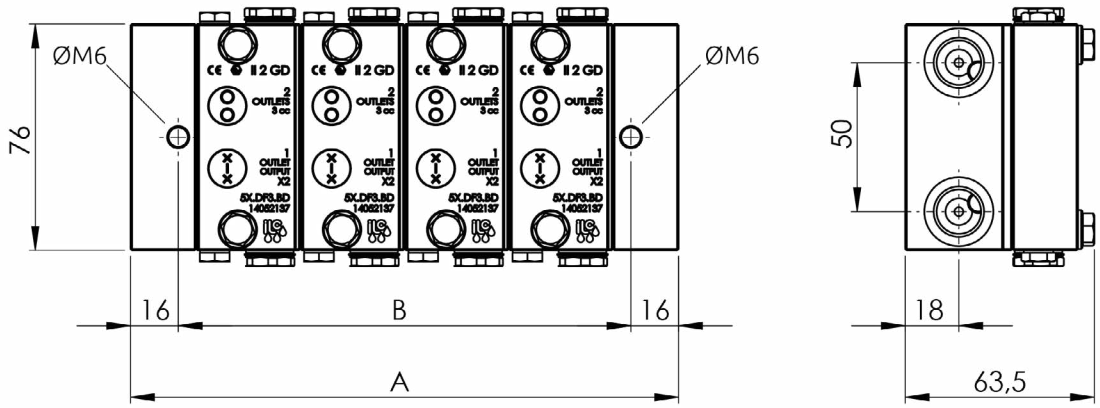

Weld plates

for DF-1 / DF-3 valves

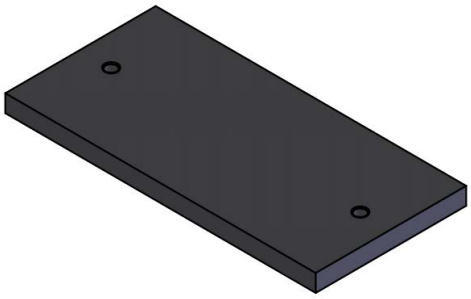

Steel	SS316.L	Valves	A (mm)	B (mm)
CN.FP3.01	CX.FP3.01	1	46.5	75
CN.FP3.02	CX.FP3.02	2	81.2	109.7
CN.FP3.03	CX.FP3.03	3	115.9	144.4
CN.FP3.04	CX.FP3.04	4	150.6	179.1

DF-1 — Fixed discharge 1 cc (with inductive sensor)

Steel		SS316.L				
BSP	NTPF	BSP	NTPF	Outlets	A	B
5N.DF1.01.BSP.ICS	5N.DF1.01.NPTF.ICS	5X.DF1.01.BSP.ICS	5X.DF1.01.NPTF.ICS	2	78.5	46.5
5N.DF1.02.BSP.ICS	5N.DF1.02.NPTF.ICS	5X.DF1.02.BSP.ICS	5X.DF1.02.NPTF.ICS	4	113.2	81.2
5N.DF1.03.BSP.ICS	5N.DF1.03.NPTF.ICS	5X.DF1.03.BSP.ICS	5X.DF1.03.NPTF.ICS	6	147.9	115.9
5N.DF1.04.BSP.ICS	5N.DF1.04.NPTF.ICS	5X.DF1.04.BSP.ICS	5X.DF1.04.NPTF.ICS	8	182.6	150.6

DF-3 — Fixed discharge 3 cc (with inductive sensor)

Steel		SS316.L				
BSP	NTPF	BSP	NTPF	Outlets	A	B
5N.DF3.01.BSP.ICS	5N.DF3.01.NPTF.ICS	5X.DF3.01.BSP.ICS	5X.DF3.01.NPTF.ICS	2	78.5	46.5
5N.DF3.02.BSP.ICS	5N.DF3.02.NPTF.ICS	5X.DF3.02.BSP.ICS	5X.DF3.02.NPTF.ICS	4	113.2	81.2
5N.DF3.03.BSP.ICS	5N.DF3.03.NPTF.ICS	5X.DF3.03.BSP.ICS	5X.DF3.03.NPTF.ICS	6	147.9	115.9
5N.DF3.04.BSP.ICS	5N.DF3.04.NPTF.ICS	5X.DF3.04.BSP.ICS	5X.DF3.04.NPTF.ICS	8	182.6	150.6

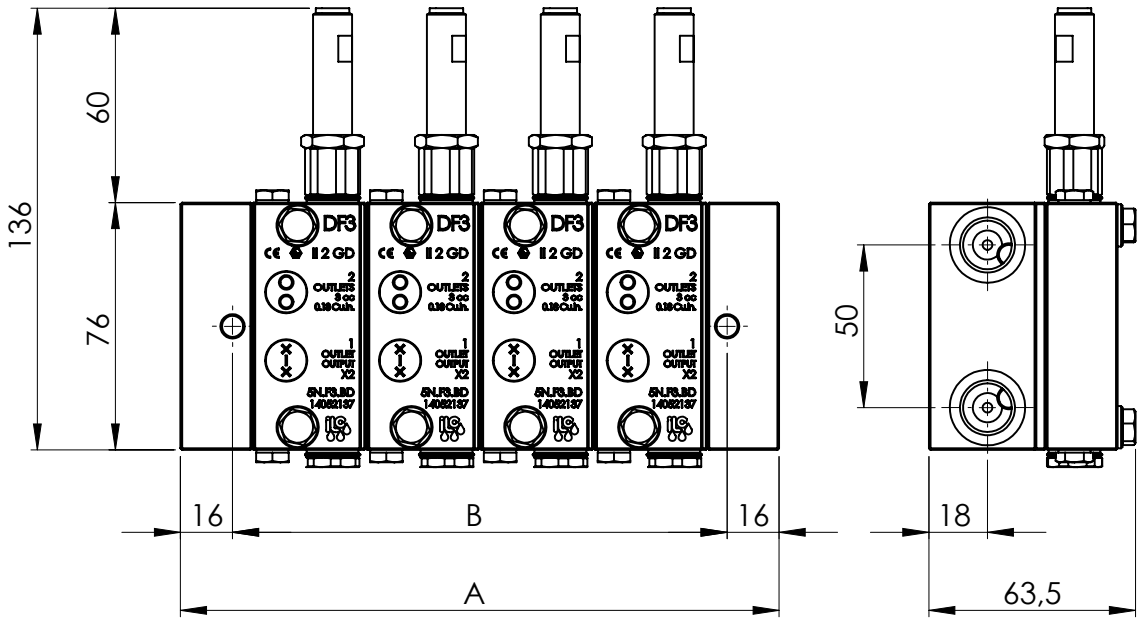

DR-3

Adjustable discharge 0.15 - 3.0 cc

Steel		SS316.L				
BSP	NTPF	BSP	NTPF	Outlets	A	B
5N.DR3.01.BSP	5N.DR3.01.NPTF	5X.DR3.01.BSP	5X.DR3.01.NPTF	2	78.5	46.5
5N.DR3.02.BSP	5N.DR3.02.NPTF	5X.DR3.02.BSP	5X.DR3.02.NPTF	4	113.2	81.2
5N.DR3.03.BSP	5N.DR3.03.NPTF	5X.DR3.03.BSP	5X.DR3.03.NPTF	6	147.9	115.9
5N.DR3.04.BSP	5N.DR3.04.NPTF	5X.DR3.04.BSP	5X.DR3.04.NPTF	8	182.6	150.6

DR-5

Adjustable discharge 0.5 - 24.0 cc

Steel		SS316.L				
BSP	NTPF	BSP	NTPF	Outlets	A	B
5N.DR5.01.BSP	5N.DR5.01.NPTF	5X.DR5.01.BSP	5X.DR5.01.NPTF	2	113	81.2
5N.DR5.02.BSP	5N.DR5.02.NPTF	5X.DR5.02.BSP	5X.DR5.02.NPTF	4	182,6	150.6
5N.DR5.03.BSP	5N.DR5.03.NPTF	5X.DR5.03.BSP	5X.DR5.03.NPTF	6	252	220
5N.DR5.04.BSP	5N.DR5.04.NPTF	5X.DR5.04.BSP	5X.DR5.04.NPTF	8	321.4	289.4

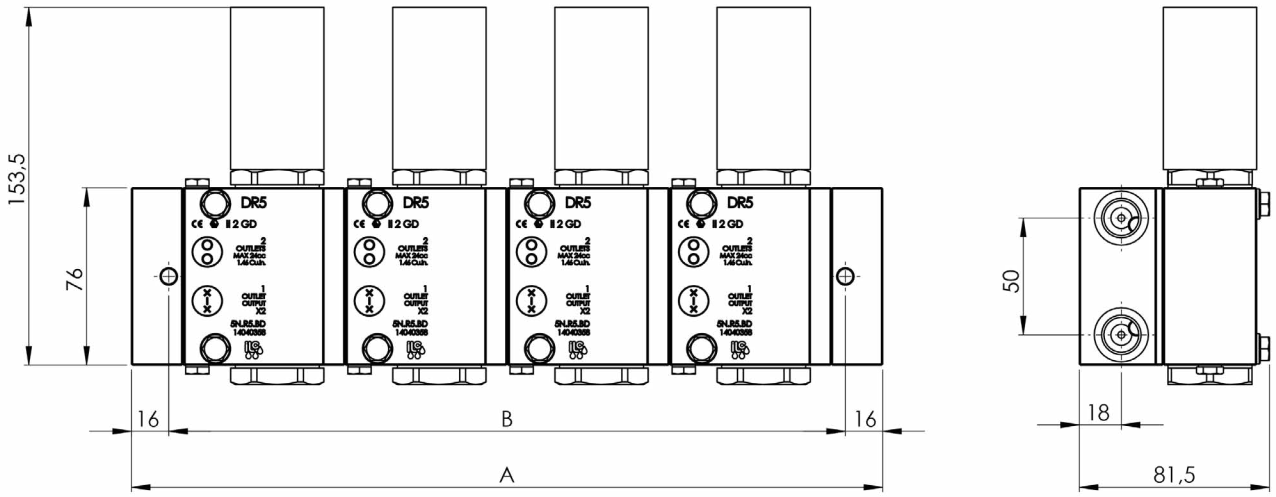

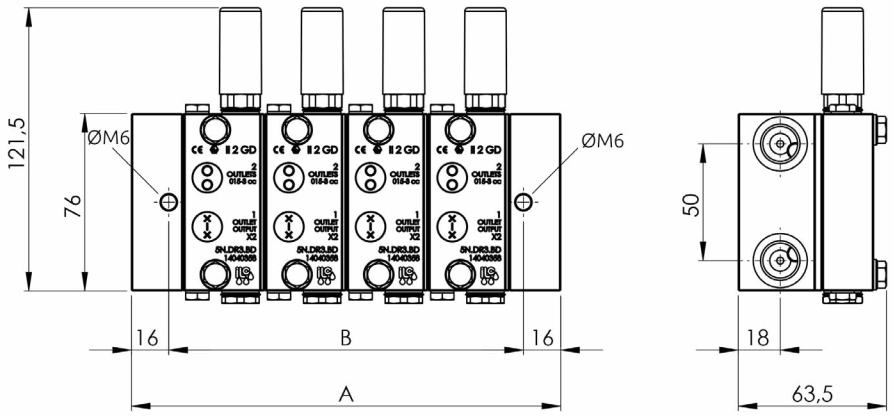

DR-3 — Adjustable discharge 0.15 - 3.0 cc (with inductive sensor)

Steel		SS316.L				
BSP	NTPF	BSP	NTPF	Outlets	A	B
5N.DR3.01.BSP.ICS	5N.DR3.01.NPTF.ICS	5X.DR3.01.BSP.ICS	5X.DR3.01.NPTF.ICS	2	78.5	46.5
5N.DR3.02.BSP.ICS	5N.DR3.02.NPTF.ICS	5X.DR3.02.BSP.ICS	5X.DR3.02.NPTF.ICS	4	113.2	81.2
5N.DR3.03.BSP.ICS	5N.DR3.03.NPTF.ICS	5X.DR3.03.BSP.ICS	5X.DR3.03.NPTF.ICS	6	147.9	115.9
5N.DR3.04.BSP.ICS	5N.DR3.04.NPTF.ICS	5X.DR3.04.BSP.ICS	5X.DR3.04.NPTF.ICS	8	182.6	150.6

DR-5 — Adjustable discharge 0.5 - 24.0 cc (with inductive sensor)

Steel		SS316.L				
BSP	NTPF	BSP	NTPF	Outlets	A	B
5N.DR5.01.BSP.ICS	5N.DR5.01.NPTF.ICS	5X.DR5.01.BSP.ICS	5X.DR5.01.NPTF.ICS	2	113	81.2
5N.DR5.02.BSP.ICS	5N.DR5.02.NPTF.ICS	5X.DR5.02.BSP.ICS	5X.DR5.02.NPTF.ICS	4	182,6	150.6
5N.DR5.03.BSP.ICS	5N.DR5.03.NPTF.ICS	5X.DR5.03.BSP.ICS	5X.DR5.03.NPTF.ICS	6	252	220
5N.DR5.04.BSP.ICS	5N.DR5.04.NPTF.ICS	5X.DR5.04.BSP.ICS	5X.DR5.04.NPTF.ICS	8	321.4	289.4

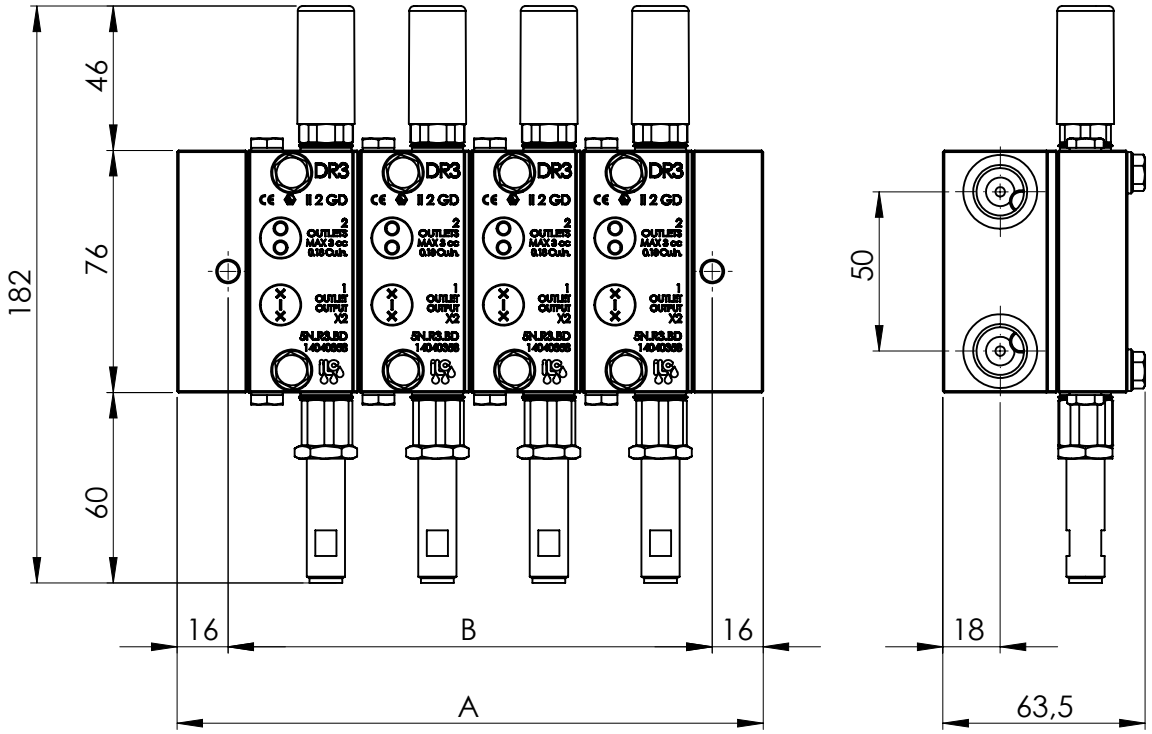

Base

Initial

Outlet	Steel	SS316.L
3/8" BSP	5N.BB.A.BSP	5X.BB.A.BSP
3/8" NPTF	5N.BB.A.NPTF	5X.BB.A.NPTF

DF1-DF3-DR3 base

Outlet	Steel	SS316.L
1/4" BSP	5N.BB.B.BSP	5X.BB.B.BSP
1/4" NPTF	5N.BB.B.NPTF	5X.BB.B.NPTF

DR5 base

Outlet	Steel	SS316.L
1/4" BSP	5N.G.BB.B.BSP	5X.G.BB.B.BSP
1/4" NPTF	5N.G.BB.B.NPTF	5X.G.BB.B.NPTF

End

Inlet	Steel	SS316.L
3/8" BSP	5N.BB.C.BSP	5X.BB.C.BSP
3/8" NPTF	5N.BB.C.NPTF	5X.BB.C.NPTF

Fixing

All metering valves and basesare provided with fixing screws, washers and assembling threaded bushes.

Replacement parts

Regulator cap	Transparent	Aluminium
Line DR-3	A83.120870	A83.120870.A
Line DR-5	A70.093625	A70.093625.A

'O'ring kit	Aluminium
For base	5N.O.RING.B
For valves	5N.O.RING.D

ReliaMAX™

Reliable Performance & Maximum Value

AUTHORIZED

DISTRIBUTOR

I.L.C. srl - Via Garibaldi, 149 - 20155 Gorla Minore - Italy
Phone +39 0331 601697 - Fax +39 0331 602001 - www.ilclube.com - **info@ilclube.it**

MADE IN ITALY