45 YEARS LUBRICATION Technologies, Inc.

AN UNCOMMON TECHNICAL RESOURCE

(413) 788-LUBE (5823)

www.LubeTechnologies.com

AUTHORIZED DISTRIBUTOR

# Operation and Service Manual

## PART # 900186
### MODEL 87-D-8-T

## PART # 900188
### MODEL 87-S-5-T


**Lubrication Technologies**
120 Bosworth Street
West Springfield, MA 01089
413-788-5823
www.lubetechnologies.com


Harvard Corporation

# TABLE OF CONTENTS

# INTRODUCTION

**Features**
- ☐ Removes contaminants as low as 1-micron
- ☐ Removes water from petroleum base fluids
- ☐ Filters most synthetic and oil base fluids
- ☐ Moves easily from site to site

**Applications**
- ☐ Hydraulic fluid in injection molding, presses and power unit
- ☐ Air compressors and vacuum pumps
- ☐ Quench oils in heat treating
- ☐ Cutting oils and coolants in industry
- ☐ Industrial fluids
- ☐ Engine oils
- ☐ Hydraulic and transmission fluids

**Increases**
- ☐ Fluid life
- ☐ Machine life
- ☐ Equipment life

**Decreases**
- ☐ Downtime
- ☐ Hazardous waste generated
- ☐ Replacement fluid costs
- ☐ Waste disposal costs

Original equipment manufacturers are incorporating Harvard Corporation's filtration technology into the design of their products. OEMs prefer engineering and building our filter into their products rather than letting the end user put our filter on afterward. Harvard Corporation also provides assistance to OEMs, including extensive engineering and technical support. Harvard builds filters designed for specific OEM equipment applications.

# How Our System Works

Contaminants from 1 to 40 microns in size are common even in full-flow, filtered lubricants and coolants. Larger contaminants nest into areas around bearings, rings, pumps, etc. and damage component surfaces. Smaller contaminants that cannot be removed by full-flow filters wear the apparatus by a process called silting.

For many years, partial-flow filtration has been used to supplement full-flow filters to remove larger contaminants and control silting. Harvard Corporation did not invent partial-flow filtration, but we significantly improved it. Our patented, non-channeling seals improve partial-flow filtration by forcing oil through a wound, fiber-filter media so fluids cannot bypass the partial-flow filter.

Independent studies conducted by the Center for Hazardous Materials Research at the University of Pittsburgh demonstrated the effectiveness of Harvard Corporation non-channeling, partial-flow filter. The filter removes virtually all remaining 1 to 40 micron contaminants while also removing the vast majority of silting particles. In addition, the filter absorbs water, antifreeze and other extraneous particles.

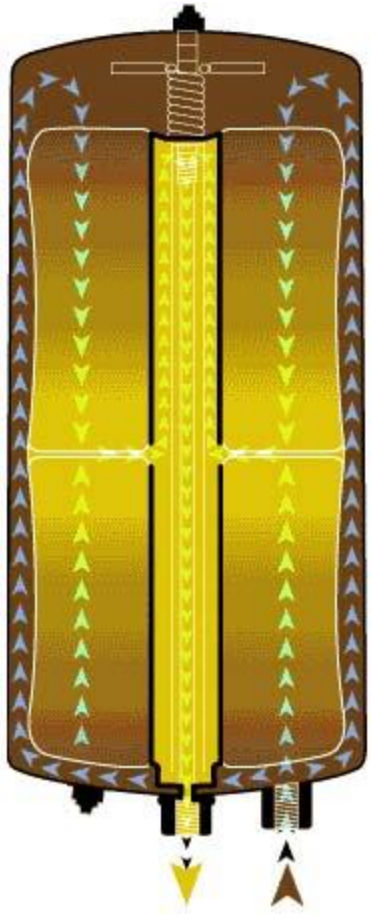

This manual will help you get the most out of your system, and provide information for maintaining and servicing. It is recommended that you read the entire manual, and note the illustrations before operating the unit.

Information for models:
87-S, 87-S-B, 87-D-G-T, 87-D, 87-D-B, 87-D-T, 87S-T, TF-S, TF-D

# Specifications

| | | |
|---|---|---|
| Model 87-S: | Dimensions: | 20 ¾" w x 44 ½" h x 18 ¼"d |
| | Weight: | 165 lbs |
| | Capacity: | 5 gpm with 150 SUS Oil |
| Model 87-D: | Dimensions: | 20 ½" w x 44 ½" h x 18 ¼" d |
| | Weight: | 195 lbs |
| | Capacity: | 5-8 gpm with 150 SUS Oil |

Welded Steel Frame, Corrosion-Resistant Powder Coated Finish

Pressure Gauge and Switch to Monitor System Pressure

Trip On/Off Switch with Amber & Green Indicator Lights

Quick Priming, Positive Displacement, Rotary Steel Gear Pump

Suction Line "Wye" Strainer

Internal Positive Protection Pressure Relief Valve

Welded Steel Housing (Stainless Steel Extra)

Powder Coated Housing

High Flow Standpipe

All Steel Fittings

Stainless Steel Tubing

# Single System
# P/N 900188

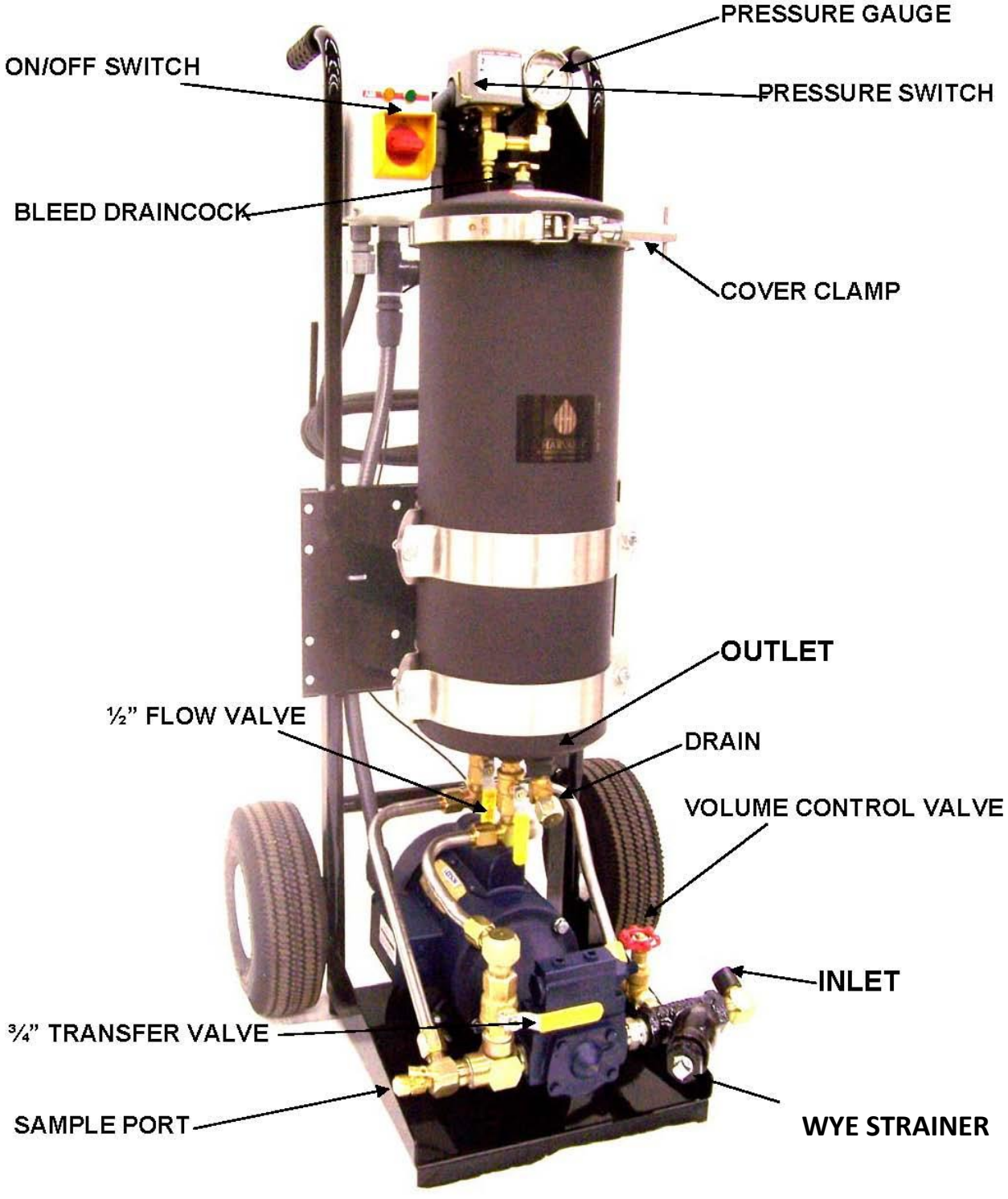


**FIGURE 1**

# Double System
# P/N 900186

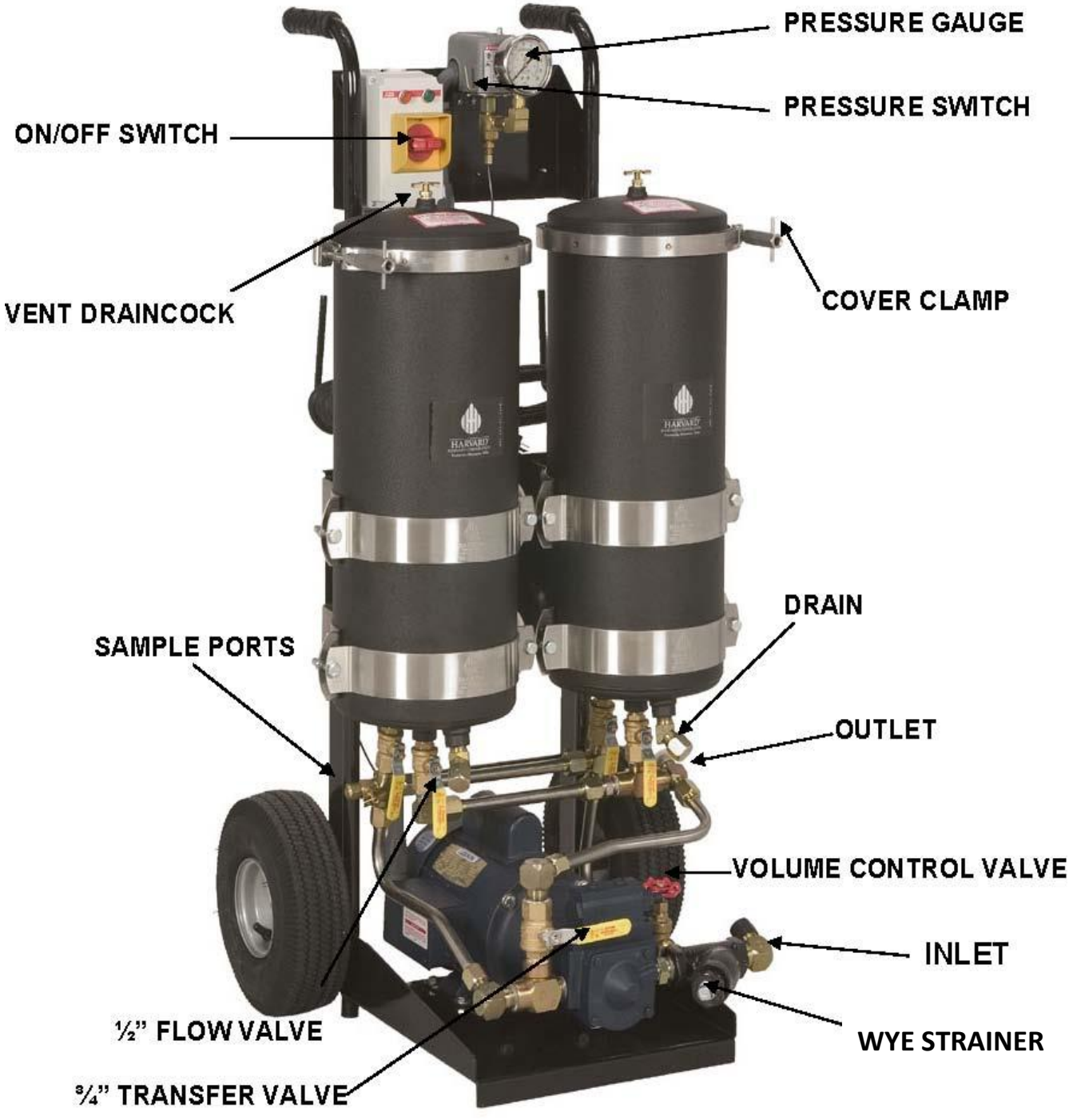


**FIGURE 2**

# Pre-Operating

1. Connect the inlet and outlet hoses to the inlet and output fittings, respectively.

2. Connect or insert the inlet line to the fluid to be cleaned, and the outlet line to the fluid to be determined. See Note 1.

3. Connect the power cord to a proper voltage and amperage line as specified on the data plate. The standard plug provided is for 110/120 volt, 20 amp service. See Note 2.

4. Install the new filter element and seal as per “Element Change Procedures”.

Note 1: Refer to flow diagrams.
Note 2: If using an extension cord, make sure it is heavy duty.

# Operating Instructions

1. Open the inlet and outlet flow valves.
2. Close the transfer valve.
3. Open the volume control valve.

**Warning: Never start the motor while the valves are closed. Damage to the motor may result and void the warranty!**

4. Move the lever on the pressure switch to a vertical position.
5. Rotate the start switch to the “on” position.
6. Slowly close the volume control valve (VCV) until the pressure gauge is at or above 20 psi.
   - For low-viscosity fluids, the VCV may need to be completely closed at this point.
   - For high-viscosity fluids, the VCV may need to be fully opened at this point. Running high-viscosity fluids back through the pump generates heat, which lowers the viscosity.
7. When the pressure gauge is steady at 20 psi, move the pressure switch lever to the horizontal position.

**In transfer mode, fluid bypasses the filter element(s). To operate in transfer mode, close all flow valves, volume control valve and open the transfer valve.**

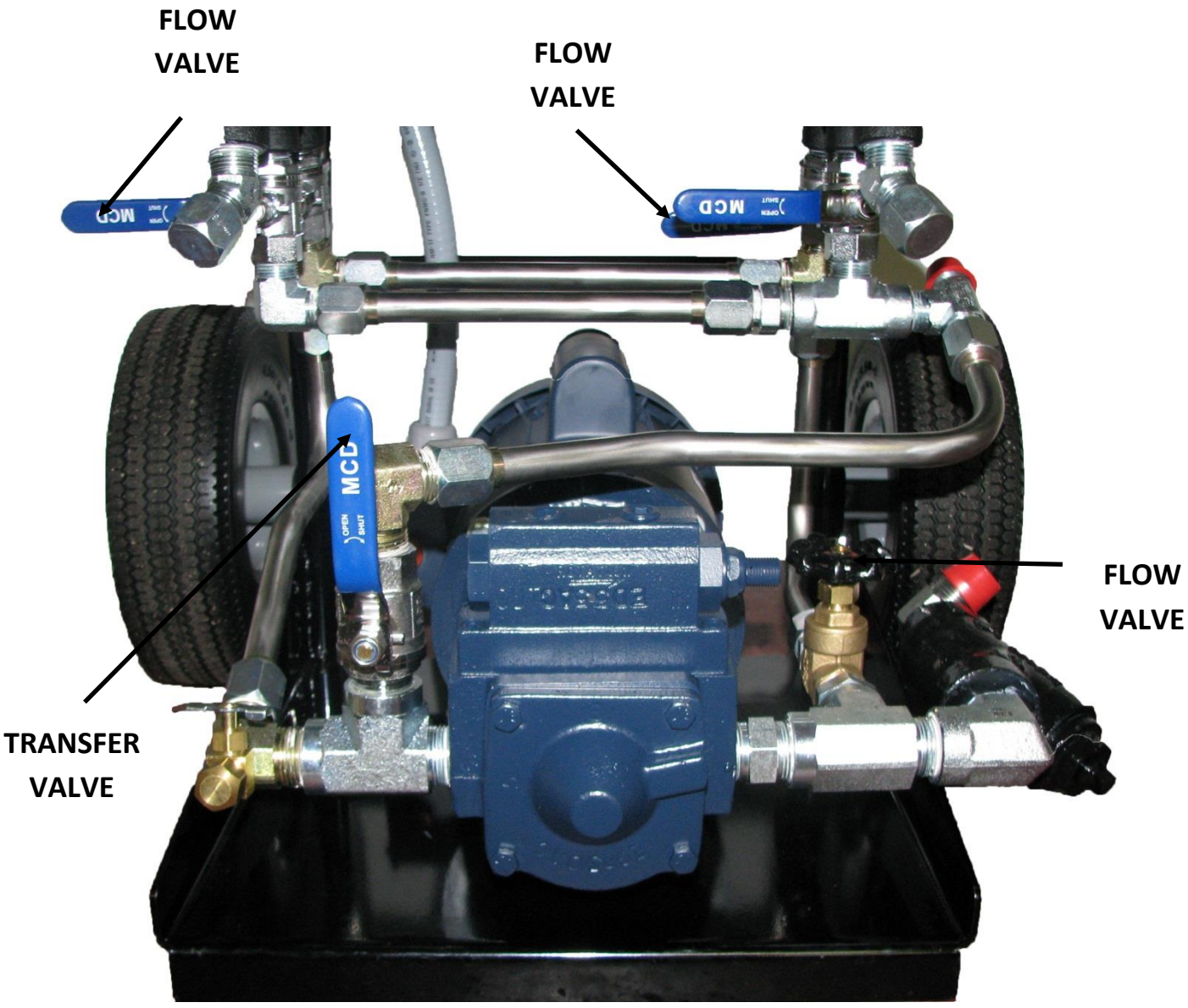

# Element Change Procedure

***Element Replacement is required when the pressure gauge is at or above 55 psi.***

## WARNING! UNIT MUST BE OFF WHEN SERVICING

### Depending on model, refer to Figure 1 or 2.

1. Turn the unit off.
2. Remove the drain cap at the bottom of the housing, and open the vent drain cock. See Note 1.
3. Remove the cover clamp and cover.
4. Remove the turndown bolt, turning CCW.
5. Lift out the element, using the pull strap or the element lifter, and allow it to drain on a suitable container.
6. Reinstall the drain cap.
7. Install the new element, orienting it so that the end with the soft gasket faces down.
8. Replace the turndown bolt seal.
9. Reinstall the turndown bolt. Screw it CW until it comes to a definite stop.
10. Reinstall the cover and clamp, and then close the vent. See Note 2.
11. Restart the system, and bleed off any air from the housing(s) using the vent cock located on the housing cover(s).

The filter system is now ready to use.

**Note 1: Use a suitable container to catch fluid; the housing can hold up to 5 gallons.**

**Note 2: Before the cover is installed, the drained fluid can be put back into the housing.**

# Element Application Guide

| Fluid Type | Filter No. |
|---|---|
| Lube Oil…… | 1002* or 1004 |
| Transmission Oil…….. | 1004* or 1002 |
| Hydraulic Oil (300 SUS max)…… | 1004* or 1002 |
| Hydraulic Oil (3000-1000 SUS max)…….. | 1002 or 1004* |
| Transformer Oil…… | 1004* or 1002 |
| Turbine Oil…… | 1004* or 1002 |
| E.D.M. Oil…… | 1002 or 1004* |
| Cutting Oil…….. | 1002 or 1004* |
| Synthetic Oil…… | 1004* or 1002 |
| Quench Oil…… | 1002 or 1004* |

* Use for higher flow rates.

45 YEARS LUBRICATION Technologies, Inc.
AN UNCOMMON TECHNICAL RESOURCE
(413) 788-LUBE (5823)
www.LubeTechnologies.com

# Sampling Procedure

1. Remove the sample valve cap.

2. Clean the outlet port to remove dust and dirt.

3. Place a container beneath the sample valve to catch the oil flow. The container should hold at least one quart (0.95 L).

4. Open the sample valve to allow a steady stream of oil from the outlet.

5. Open the sample bottle and fill it from the stream of oil. Empty and refill it two or three times to clean the bottle with the oil.

   Warning: Opening the sample valve knocks particles into the oil. To avoid contaminating the sample, wait several seconds after opening the valve before filling the sample bottle.

6. Fill the bottle for the last time. Quickly cap the bottle.

7. After the sample bottle is capped, close the sample valve to stop the oil flow.

8. Replace the sample valve cap.

9. Complete the sample information sheet.

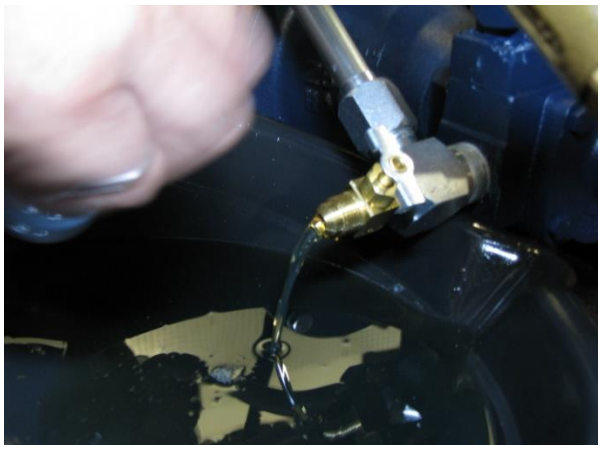

Figure 3: Step 3.

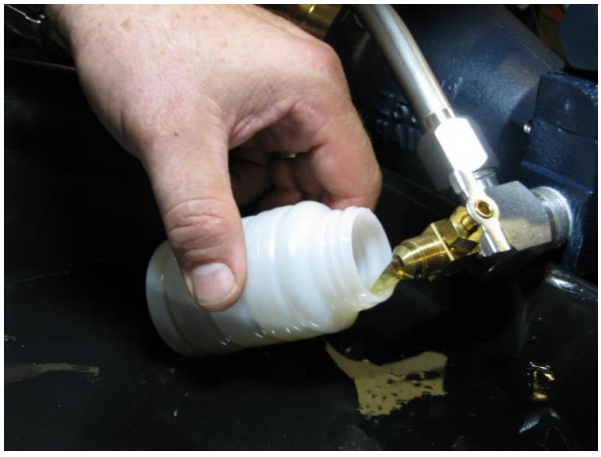

Figure 4: Step 4.

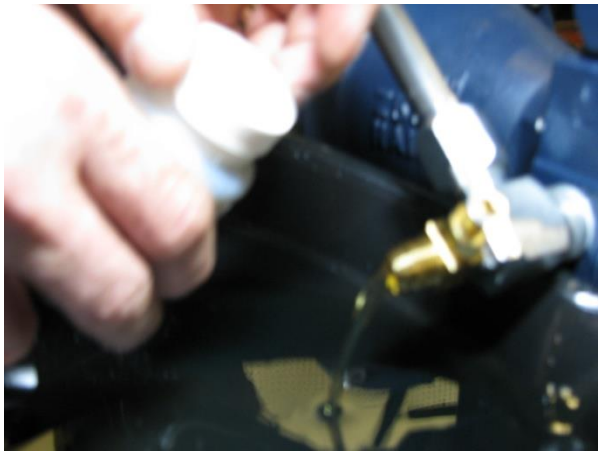

Figure 5: Step 5.

45 YEARS LUBRICATION Technologies, Inc.
AN UNCOMMON TECHNICAL RESOURCE
(413) 788-LUBE (5823)
www.LubeTechnologies.com

# Parts Replacement Procedures

**CAUTION!** To prevent injury, disconnect power cord and inlet and outlet hoses before performing any maintenance or repairs.

## On/Off Switch

1. Unplug the power cord.
2. Remove the switch cover.
3. Disconnect the power cord wires and remove the cord and strain relief.
4. Disconnect the wires.
5. Remove the nut from the conduit fittings in switch.
6. Remove the four (4) mounting screws and the switch box.
7. Install the new switch in reverse order. Use the wiring diagram to reconnect the wires.

## Pump Seal Replacement

1. Unplug the power cord.
2. Disconnect the inlet hose.
3. Disconnect the hoses to the filter housing(s), at the housing ends.
4. Loosen the two (2) screws in Z bracket.
5. Pull the pump out of the Z bracket.
6. Remove the oil cover seals, wiper seals, and shaft
7. Install the new seals from the kit, reassemble the pump, and reinstall it into the Z bracket.
8. Connect the hoses to the filter housings and reconnect the inlet hose
9. Order kit #850012 for 3, 5, and 8 GPM pump replacement seals

## Pump Removal and Installation

1. Unplug the power cord.
2. Disconnect the plumbing connected to the filter housings.
3. Loosen the two (2) setscrews in the bracket.
4. Pull the pump out. Remove the discharge piping and the Y strainer from the pump.
5. Remove the drive coupling.
6. Remove the Z bracket mounting bolts from the motor end and rotate the bracket so that

the opening is up. Screw in the two (2) bolts finger tight.

7. Slide the drive coupling on to the pump shaft, with the teeth facing away from the pump.
8. Slide the new pump into the Z bracket as far as it will go, and tighten one (1) setscrew.
9. Slide the drive coupling toward the motor so that it engages the mating half. The rubber spider must be in place.
10. Tighten the setscrew in the coupling*.
11. Loosen the setscrew in the Z bracket, and remove the pump.
12. Remove the two (2) finger tight mounting bolts on the motor end, and rotate the bracket so that the opening is down. Reinstall the four (4) bracket mounting bolts on motor end, and secure them tightly.
13. Screw the Y strainer into the suction side of the pump, and the discharge piping into the discharge side of the pump**.
14. Insert the pump back into the Z bracket and tighten the two (2) setscrews securely.
15. Reconnect the plumbing to the filter housing.

***Note:** *Make sure there is 1/16" space between the halves.*
****Note:** *The piping should be parallel with the pump shaft when they are tight.*

## Motor Test

1. Unplug the power cord, and remove the motor wiring box cover.
2. Disconnect the black and white wires from the motor.
3. Connect the test cord to the black and white wires in the motor. Connect black to black, and white to white.
4. Plug the test cord into the same power supply as the motor. If the motor runs, then it does not need replacement.

## Motor Removal

1. Unplug the power cord, and remove the motor wiring box cover.
2. Remove the conduit fitting from the box.
3. Remove the Z bracket mounting bolts.
4. Remove the motor mounting bolts.
5. Slide the motor out from the rear of the frame.

## Motor Installation

1. Loosen the two (2) setscrews in the pump end of the Z bracket.
2. Rotate the Z bracket so that the opening is up, and tighten one (1) setscrew*.
3. Slide the flexible coupling half on to the motor shaft, with its teeth facing away from the motor.
4. Slide the motor into position from the rear of the frame until it contacts the Z bracket.
5. Connect the Z bracket to the motor with one (1) bolt, and tighten it finger tight.
6. Slide the flex coupling so that it engages the mating half with 1/16” space**.
7. Tighten the setscrew in the coupling.
8. Remove the Z bracket mounting bolt and loosen the pump end setscrew.
9. Rotate the Z bracket so that the opening is down.
10. Reinstall the four (4) Z bracket mounting bolts and tighten them securely.
11. Tighten the two (2) setscrews in the pump end of the bracket*.
12. Reinstall the four (4) motor mounting bolts.
13. Reconnect the conduit to the motor wiring box.
14. Reconnect the wires to the motor, using the wiring diagrams as a reference.
15. Reinstall the motor wiring box cover.

***Note:** *Make sure the pump and the Z bracket are tight together.*

****Note:** *The rubber spider must be in place*.

## Pressure Switch

The pressure switch provided on this filter unit will monitor the pressure in the filter housings. If the pressure falls below 12 psi, or increases above 65 psi, the switch will shut off the pump.

The low pressure trip (cut-in) is adjusted to shut off the unit when the intake is clogged or sucking air. This is called “cavitation protection”, and is also very useful for shutting the system down when the supply source is empty.

The high pressure trip (cut-out) is adjusted to shut off the unit when filter housing pressures exceed prescribed limits. It may also indicate a loaded element.

To replace the pressure switch, do the following:

1. Disconnect the power cord from its source and remove the pressure switch cover.
2. Mark the wires, for reference in step 7.
3. Disconnect the wires from the switch and unplug the connectors.
4. Remove the conduit fittings from the switch.
5. Take out the two (2) mounting screws and remove the pressure switch.
6. Unscrew the brass fittings and gauge as a unit from the switch.
7. Install the new pressure switch in reverse order. See the wiring diagram to reconnect the wires.
8. Refer to the “Pressure Adjustments on Replacement Switches” section to properly set the pressure switch.

## Pressure Adjustments on Replacement Switches

### Only adjust replacement switches!

#### Adjust in Proper Sequence

1. Remove the nut to remove the pressure switch cover.
2. Low Point: Turn the range nut on the large spring CW to increase the pressure; or CCW to decrease the pressure. The recommended setting is 12 psi.
3. High Point: Turn the range nut on the small spring CW to increase pressure; or CCW to decrease the pressure. The recommended setting is 65 psi.
4. Reinstall the cover.

Note: The pressure relief valve is set to open at a higher pressure than the pressure switch. Its factory setting is 70 psi.

# Flow Diagrams

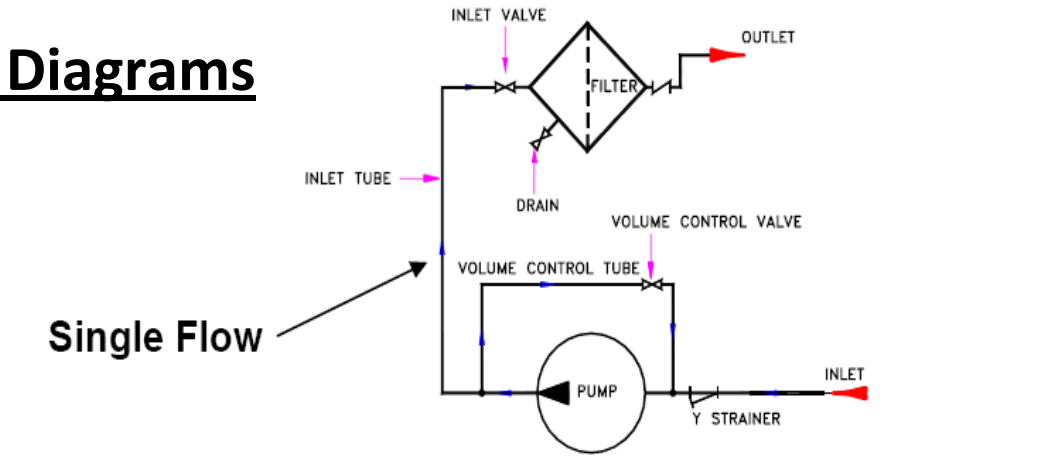


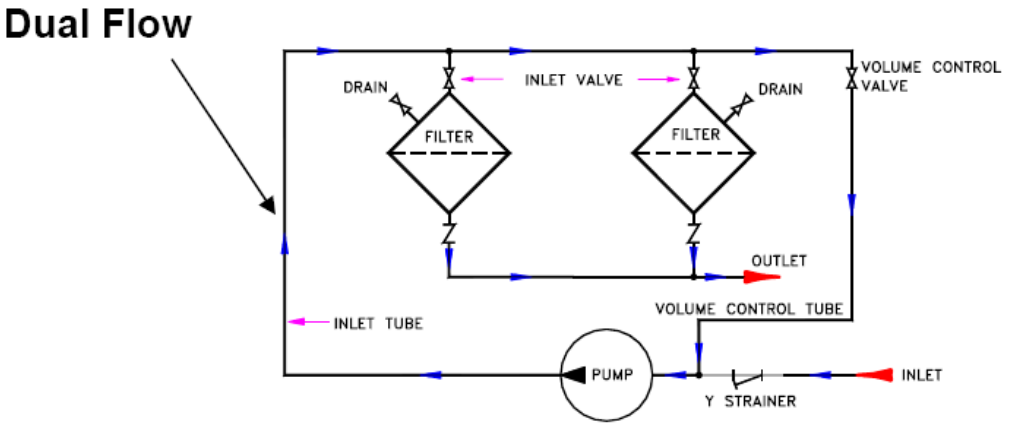


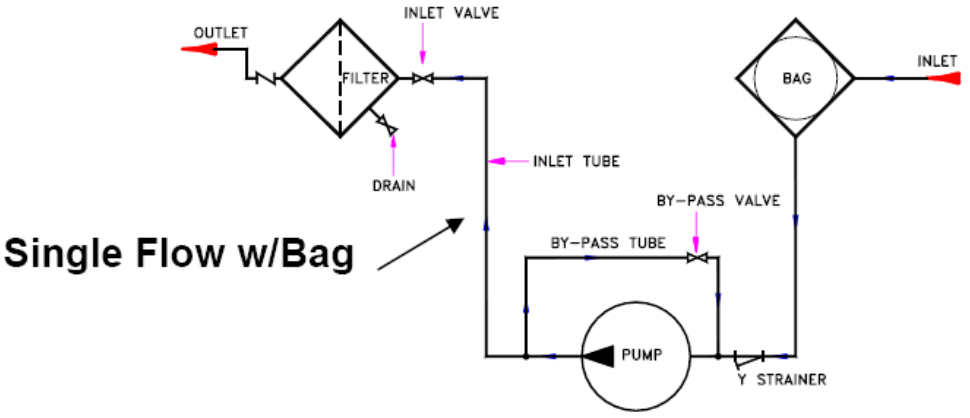


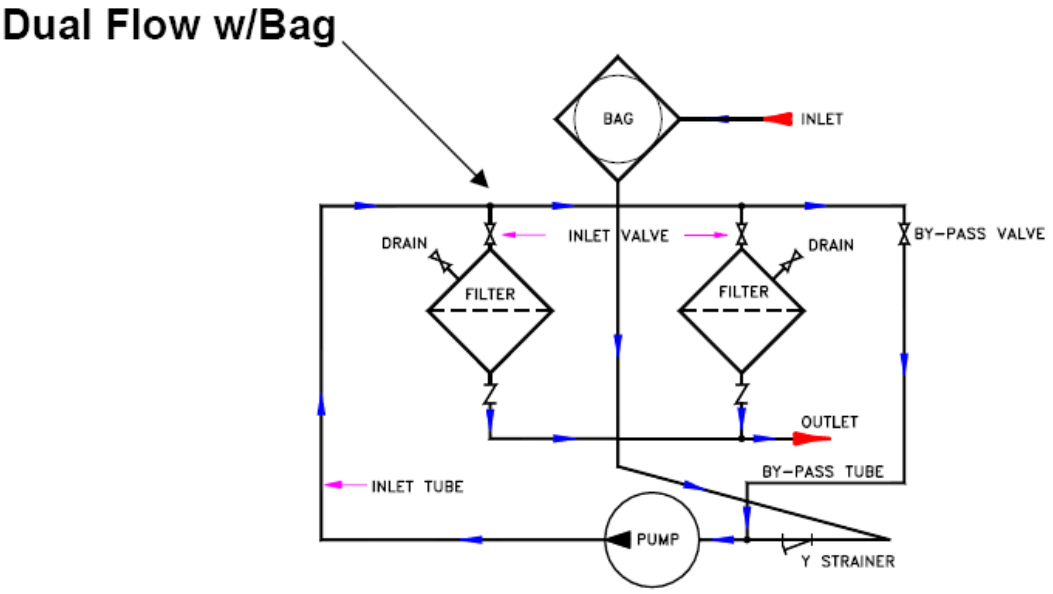

# Wiring Diagrams

## WD-1

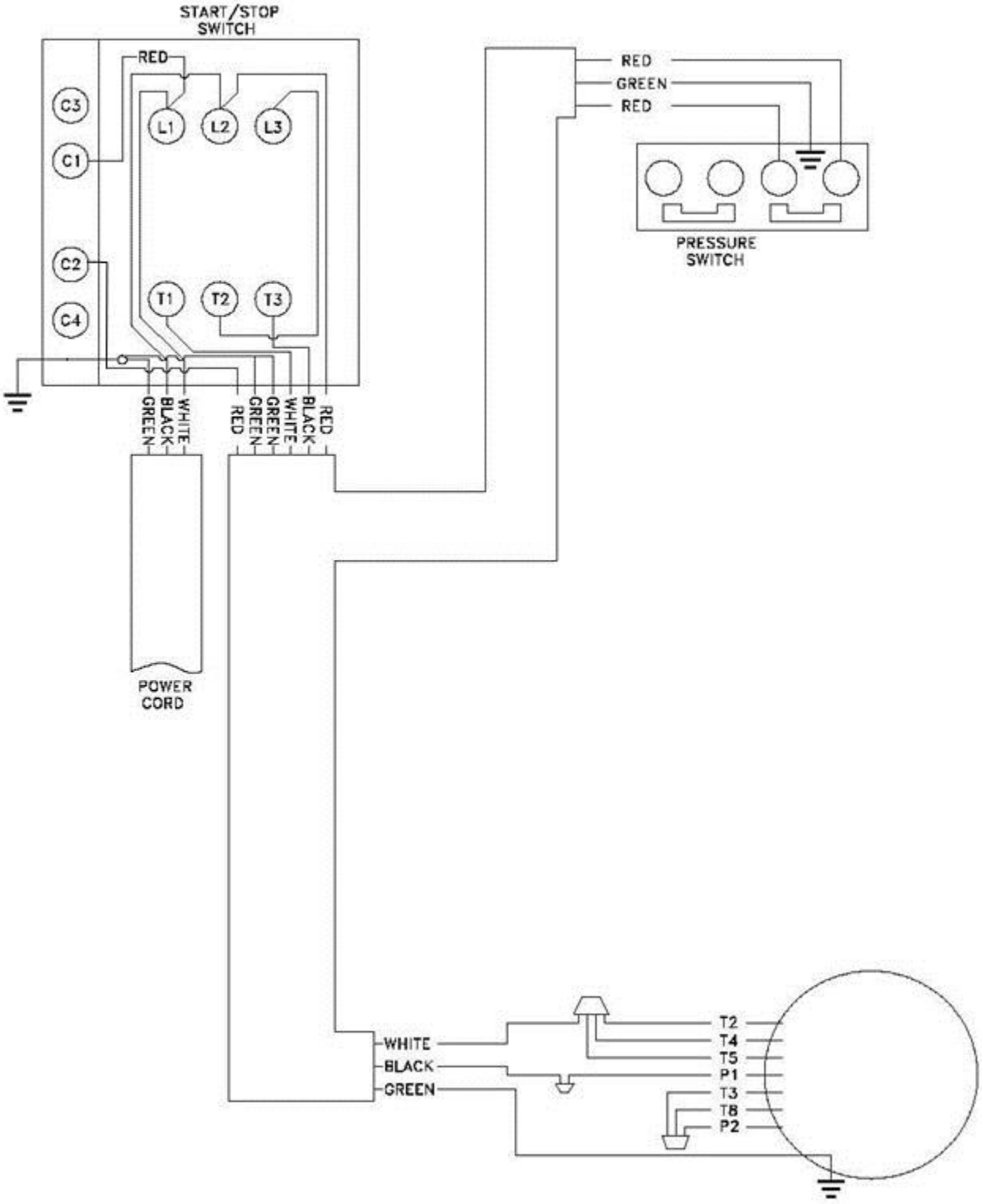


## 110/120 Volt, 1 Phase

# WD-2

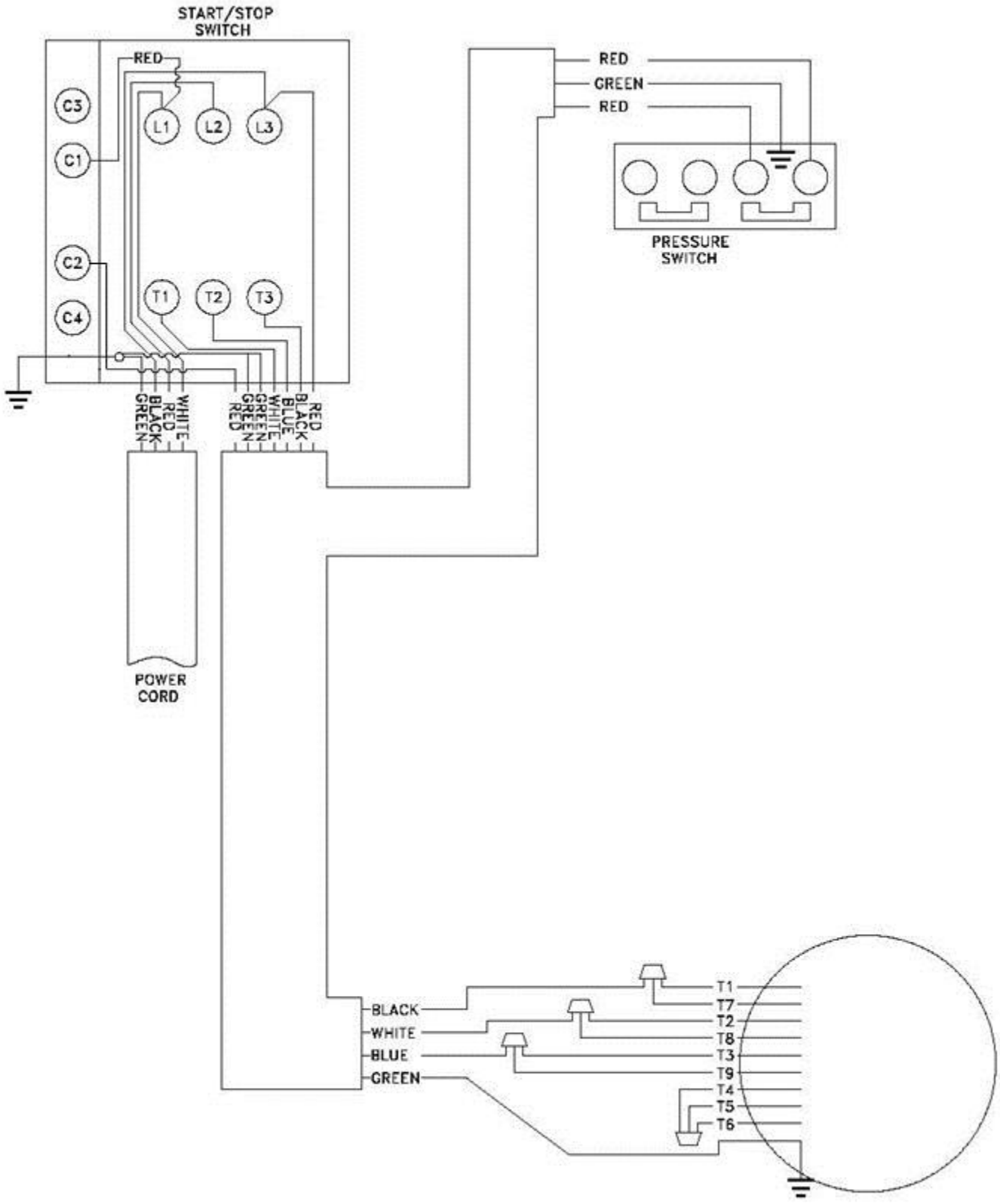


## Dual 208/240/480 Volt, 3 Phase

# Frame

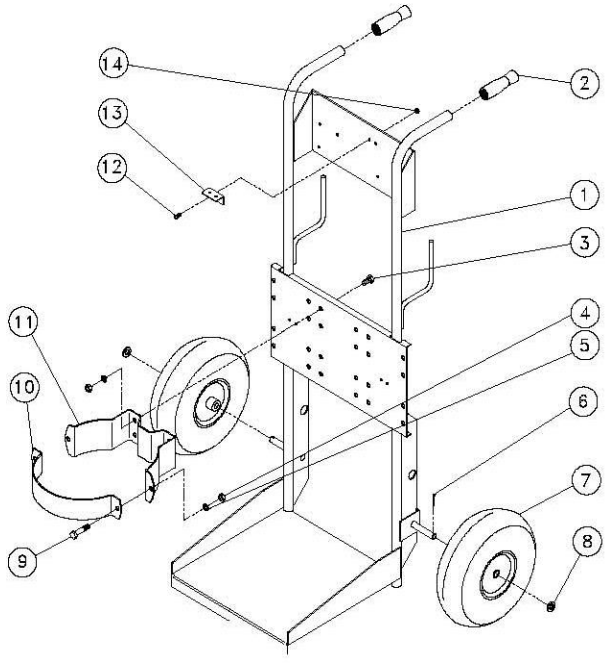


| Item | Description | | Qty | P/N |
|---|---|---|---|---|
| 1 | Frame . . . . . | | 1 | 2125 |
| 2 | Grip . . . . . | | 2 | 0806 |
| 3 | Screw . . . . . | (S) | 8 | 2616 |
| | | (D) | 16 | |
| 4 | Nut, 3/8”-16 . . . . . | (S) | 12 | 1097 |
| | | (D) | 24 | |
| 5 | Lock washer, split 3/8” . . . . . | (S) | 12 | 1597 |
| | | (D) | 24 | |
| 6 | Cotter Pin, 1/8” dia. x 1”long . . . . . | | 2 | 0840 |
| 7 | Wheel . . . . . | | 2 | 5186 |
| 8 | Washer, flat 1/2” . . . . . | | 2 | 1136 |
| 9 | Screw, 3/8-16x 1 3/4” Hex Head . . . | (S) | 4 | 1595 |
| | | (D) | 8 | |
| *10 | Bracket, Mounting --front . . . . . | (S) | 2 | 3359 |
| | | (D) | 4 | |
| *11 | Bracket, Mounting –rear . . . . . | (S) | 2 | 3360 |
| | | (D) | 4 | |
| 12 | Screw #10-32, Round Head . . . . . | | 2 | 2691 |
| 13 | Bracket-Press, SW Mounting . . . . . | | 1 | 1198 |
| 14 | Nut–Keps #10-32 . . . . . | | 2 | 2658 |

# Housing

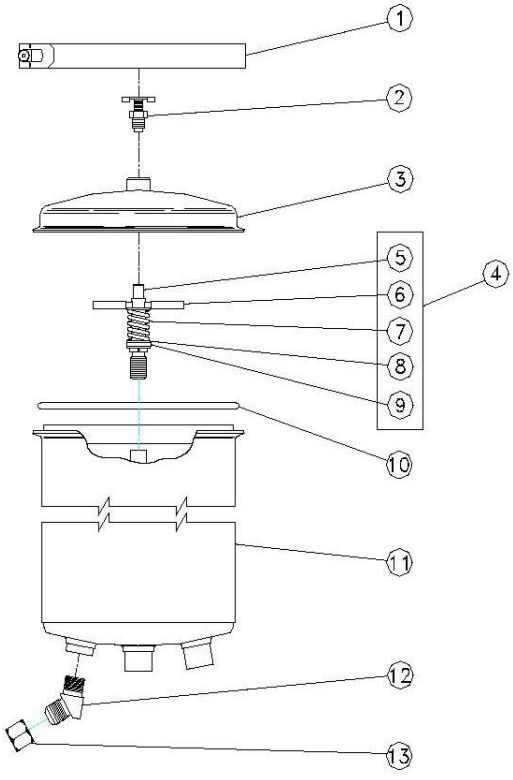


| Item | Description | Qty | P/N |
|---|---|---|---|
| 1 | Clamp—Cover Assy. . . . . | 1 | 3922 |
| 2 | Valve—Vent . . . . . | 1 | 1839 |
| 3 | Cover—Black . . . . . | 1 | 2102 |
| 4 | Turn Down Bold Assy (Hyd) . . . . . | 1 | 0593 |
| 5 | Turn Down Bold (Hyd). . . . . | 1 | 0453 |
| 6 | Handle—Turn Down Bolt . . . . . | 1 | 0446 |
| 7 | Spring—Turn Down Bolt . . . . . | 1 | 0447 |
| 8 | Washer—Turn Down Bolt . . . . . | 3 | 0449 |
| 9** | Seal—Turn Down Bolt (included with filter) . . | 1 | 0448 |
| 10 | O-Ring . . . . . | 1 | 0433 |
| 11 | Housing—Black . . . . . | 1 | 3284 |
| 12 | Elbow, ½” NPT x 45° Street . . . . . | 1 | 5052 |
| 13 | Cap . . . . . | 1 | 5580 |

Note** Standard Material is Buna N. Also available in Viton and Epr.

# Housing (Optional Bag)

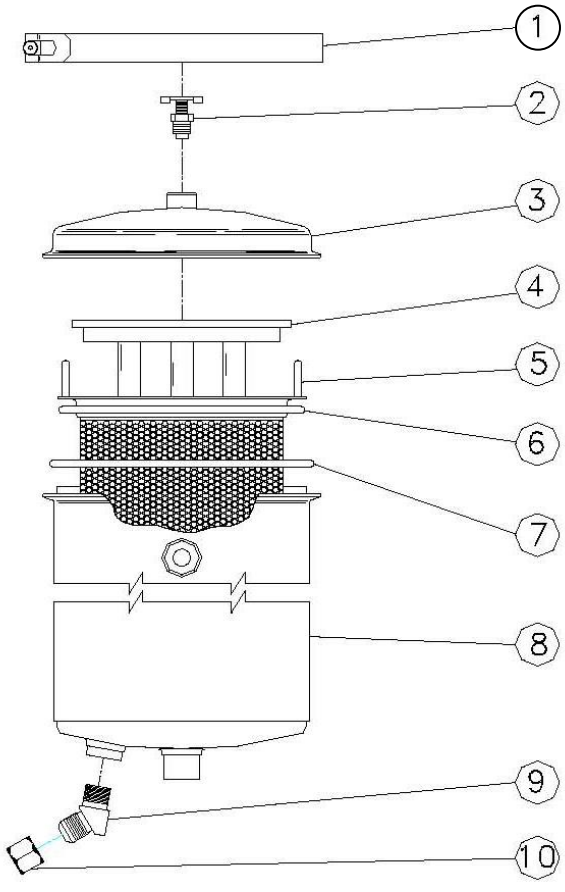


| Item | Description | Qty | P/N |
|---|---|---|---|
| 1 | Clamp—Cover Assy . . . . . | 1 | 3922 |
| 2 | Valve—Vent . . . . . | 1 | 1839 |
| 3 | Cover-Black . . . . . | 1 | 2102 |
| 4 | FB Retaining Ring Assy with Magnets . . . . . | 1 | 3638 |
| 5 | Basket Assembly . . . . . | 1 | 2877 |
| 6 | O-Ring (Basket) . . . . . | 1 | 4281 |
| 7 | O-Ring (Cover). . . . . | 1 | 0433 |
| 8 | Housing BF ¾”. . . . . | 1 | 3724 |
| 9 | Elbow ½” NPT x 45º Street . . . . . | 1 | 5052 |
| 10 | Cap. . . . . | 1 | 5634 |

# Pump and Motor Assembly

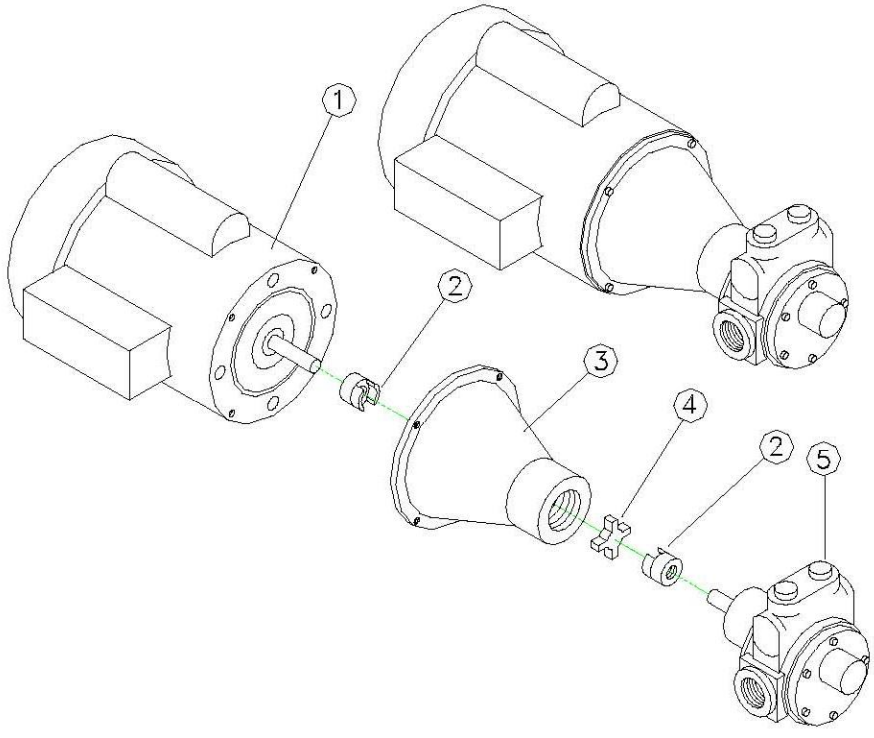


| Item | Description | Qty | P/N |
|---|---|---|---|
| 1 | Motor–3/4 HP, 120/240V, 1Φ . . . . . | 1 | 928 |
| 2 | Coupling (Motor) Lovejoy 5/8”LO70 . . . | 1 | 2193 |
| | Coupling (Pump) Lovejoy 1/2” LO70 . . . | 1 | 1560 |
| 3 | Z Bracket . . . . . | 1 | 0845 |
| 4 | Spider . . . . . | 1 | 2387 |
| 5 | Pump 5GPM . . . . . (S) | 1 | 2204 |
| | Pump 8GPM . . . . . (D) | 1 | 2712 |

# Electrical

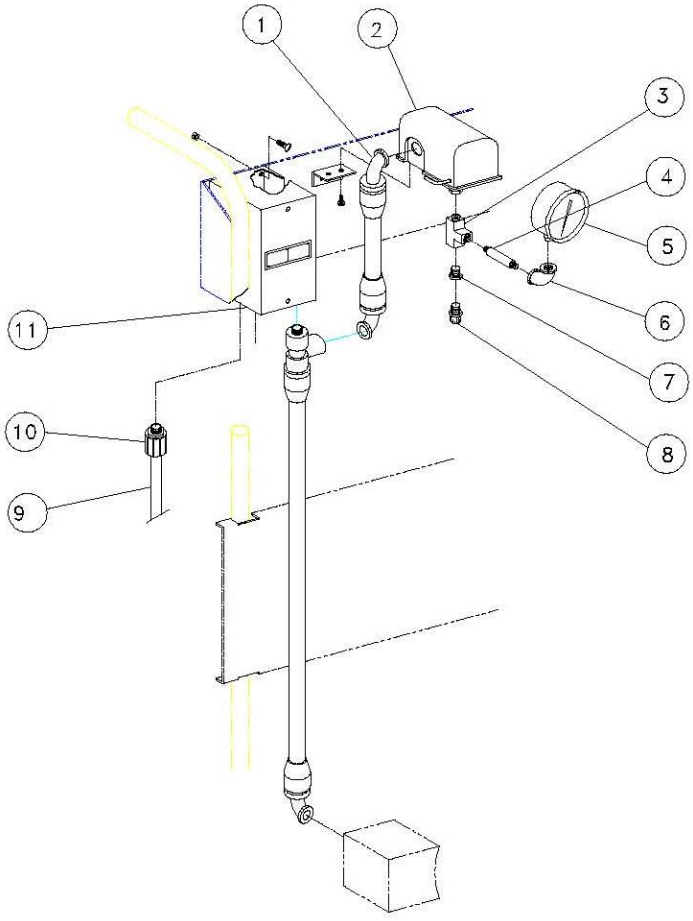


| Item | Description | Qty | P/N |
|---|---|---|---|
| 1 | Conduit Assembly | 1 | 2785 |
| 2 | Pressure Switch | 1 | 0802 |
| 3 | Tee ¼”Npt Street, Brass | 1 | 0953 |
| 4 | Nipple ¼”Npt x 1.5” | 1 | 4261 |
| 5 | Pressure Gauge | 1 | 0841 |
| 6 | Elbow ¼”Npt x 90º | 1 | 4262 |
| 7 | Reducer Bushing ¼”x 1/8”Brass | 1 | 0948 |
| 8 | Connector Tubing 1/8”OD | 1 | 0855 |
| 9 | Power Cord | 1 | 0904 |
| 10 | Cable Connector | 1 | 3399 |
| 11 | Starter Switch, 10-16 AMP , 120 V | 1 | 3488 |

# Troubleshooting Guide

| Problem | Probable Cause | Corrective Action |
|---|---|---|
| Motor will not start | No Power<br>Faulty power switch<br>Power switch not wired correctly<br>Motor not free to turn | Connect to proper power.<br>Replace power switch.<br>Check wiring diagram.<br>Turn cooling fan to check for binding, if doesn't turn see pump. |
| Motor will not stay running | Lever on pressure switch not in vertical position<br>Pressure not above 20 PSI<br><br>Pressure over 70 PSI | Raise lever to vertical.<br><br>Increase Volume Control to above 20 PSI.<br>To high viscosity oil, filter clogged, blockage in outlet side of pump. |
| Pump does not Pump | Flexible coupling loose<br><br>Pump locked up | Tighten Coupling (Refer to Pump Installation).<br>Turn cooling fan, if motor doesn't turn, loosen coupling.<br>Repeat if fan turns replace pump. |
| Pump stops while running | Suction lost or blocked<br>"Wye" Strainer Plugged<br>Element Loaded up | Check supply source.<br>Clean Strainer.<br>Replace Element. |

**MODEL NO.# _____**

**SERIAL NO.#_____**

**MOTOR S/N NO.#_____**

**PUMP S/N NO#_____**

**DISTRIBUTOR_____**

## LIMITED WARRANTY

***The Harvard Corporation warrants its filter elements to be free from defects in material and workmanship under normal use and service. All other products manufactured by Harvard Corporation are warrantied for one year from the date of purchase by Distributor. IT IS EXPRESSLY UNDERSTOOD THAT THIS WARRANTY IS IN LIEU OF TORT LIABILITY AND ALL OTHER EXPRESS OR IMPLIED WARRANTIES, INCLUDING BUT NOT LIMITED TO THE WARRANTIES OF MERCHANTABILITY AND FITNESS FOR USE, AND THAT HARVARD CORPORATION'S SOLE OBLIGATION UNDER THIS WARRANTY SHALL BE, AT HARVARD'S OPTION, TO EITHER REPLACE THE DEFECTIVE PRODUCT OR REFUND OF PURCHASE PRICE***

Newest patents approved: Pat: 5,486,290, Pat. 6,270,668 B, Pat. 6,319,416 B2, and other patents pending.

Have a question or need further information?
Contact the Distributor in your area, call or email us a question or request for information. We will respond as quickly as we can. Thank you for your interest in Harvard Corporation.

**Lubrication Technologies, Inc.**
120 Bosworth Street
West Springfield, MA 01089

413-788-LUBE (5823)
Fax 413-218-5823

www.LubeTechnologies.com